BIOMA CONDENSING UNITS

AN EMBRACO INNOVATIVE SOLUTION FOR COMMERCIAL REFRIGERATION

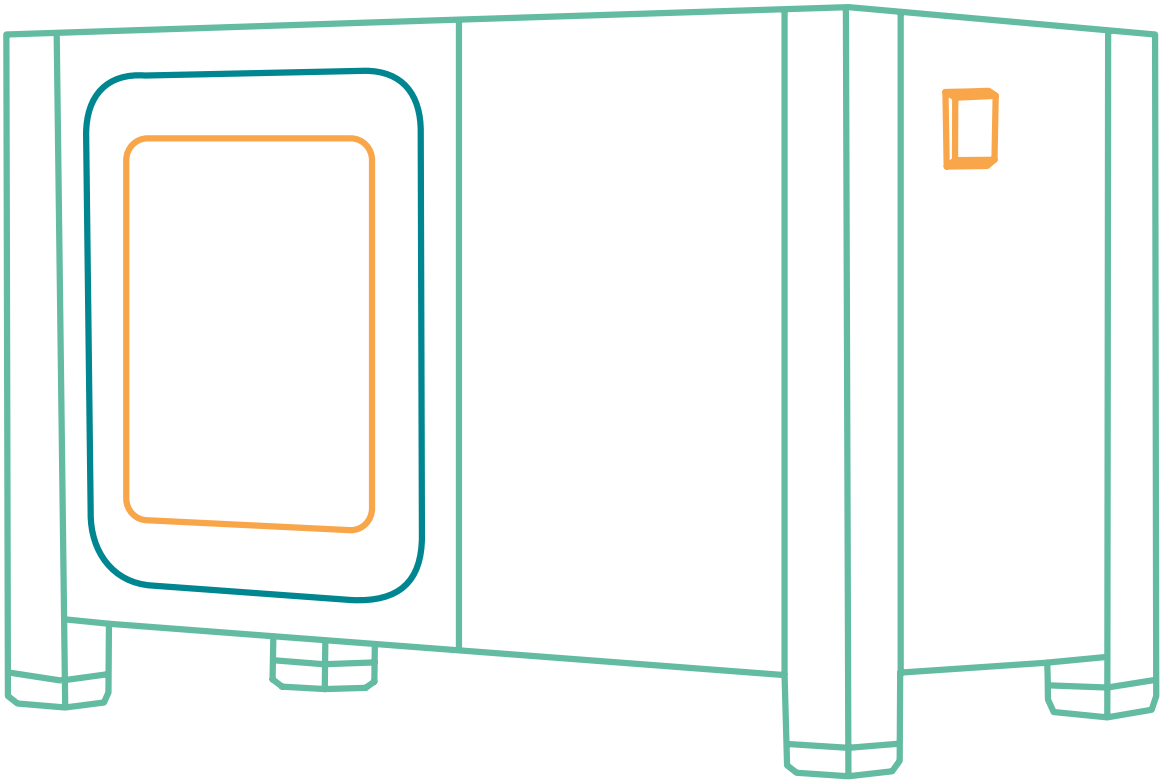

Multi-Refrigerant Platform

- R404A
- R452A
- R449A
- R134a
- R513A

embraco
Cooling Solutions

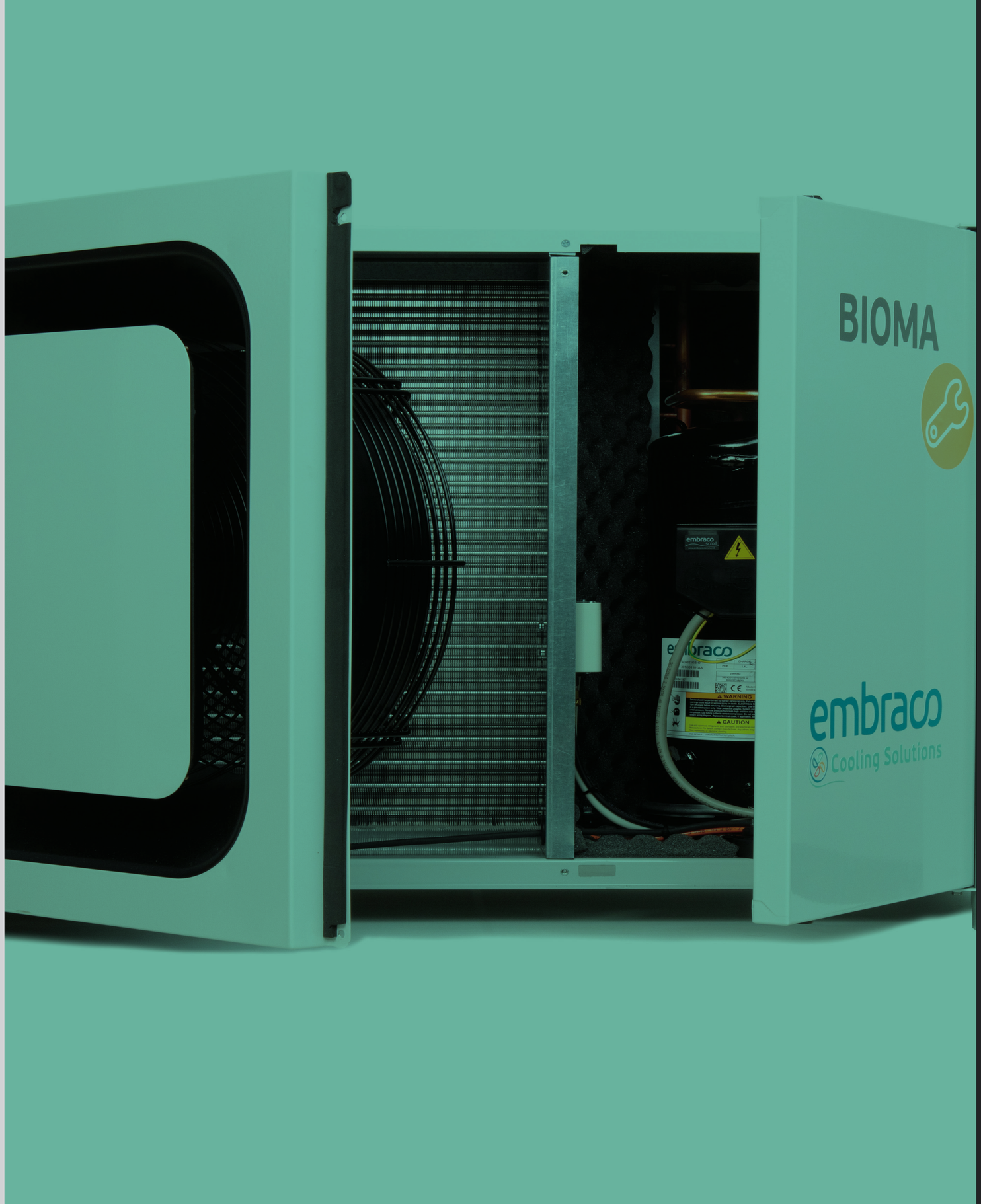

01 BIOMA PRODUCT FEATURES

02 BIOMA PRODUCTS INFO

03 GENERAL DATA & PERFORMANCE

04 DIGITAL TOOLS

HIGH EFFICIENCY RANGE: FROM 0.5 Kw TO 10 Kw

0.5 Kw **LBP R404A - R449A - R452A** *4 Kw*

0.7 Kw **MBP R134a - R513A** *6 Kw*

0.7 Kw **MBP R404A - R449A - R452A** *10 Kw*

BIOMA RANGE MAIN FEATURES

PERFORMANCE AND OPTMIZED SOUND LEVEL

- Robust design to absorb vibration and noise
- Sound level as low as 28 dB (A)
- Acoustic jacket on scroll compressors
- Fan speed controller as standard
- 5 Faces insulated with acoustic foam

ACCESSIBILITY

- 3 door access on hinges – ¼ turn door lock to open
- Direct access to components you can set or change
- Direct access to fan and condenser

INNOVATIVE DESIGN

- Hidden fan - Stylish design for a new experience
- Unique airflow management
- Mini channel condenser – 40% less refrigerant charge

COMPACTNESS

- Optimized dimensions to reduce surface area (<0.6m²)
- 1 fan design for all housing sizes
- Stackability: Unique offer to stack units from different dimensions

FLEXIBILITY

- Multi-Refrigerant platform: R404A, R449A, R452A, R134a, R513A
- Fully equipped electrical box
- Condenser treatment against corrosive environment
- Available with the complete range of Embraco hermetic and scroll compressors

embraco Cooling Solutions

THREE SIZES: A COMPLETE RANGE

HOUSING	DIMENSIONS (mm)	
1	982 x 484 x 600	
2	1082 x 490 x 708	
3	1277 x 538 x 1005	

NOMENCLATURE

MODEL DESCRIPTION

UP- NT 2 180 GK E A E 00

BIOMA SILENT UNITS

COMPRESSOR FAMILIES

NEU NT NJ NTU NJX
SE = Scroll Embraco

APPLICATION CODE

2 = LBP **6 =** MBP

NOMINAL CAPACITY

The first digit is the number of " zeros that must be added to the last two digits to obtain the cooling capacity (approx) in kcal/h at 50 Hz.
E.g.:214 -->1400 kcal/h at 50Hz.
Scroll: In BTU/h at 60 Hz x 1000 - ARI Conditions

REFRIGERANT

GK = R404A, R452A, R449A 1~
GS = RR404A, R452A, R449A 3~
Z = R134a, R513A 1~
ZX = R134a, R513A 3~

PRODUCTION PLANT

E - Europe

COOLING SYSTEM

A - Air cooled

AMBIENT T°

E - Europe +43°C

CONFIGURATION

00 - LL+Ebox+FSC

embraco

REFRIGERANTS MAP AND EQUIPMENT LEVEL

									EOO					
APPLICATION	SUPPLY	HOUSING	MODEL	R404A	R452A	R449A	R134A	R513A	Low noise fan	Fan speed control	Liquid line	Fully equipped electr. box	Acoustic foam in compressor compart.	Acoustic jacket
MBP	1~	1	UP-NEU6212GK	●	●	●			✔	✔	✔	✔	✔	
			UP-NEU6215GK	●	●	●			✔	✔	✔	✔	✔	
			UP-NEU6220GK	●	●	●			✔	✔	✔	✔	✔	
			UP-NT6224GK	●	●	●			✔	✔	✔	✔	✔	
			UP-NT6226GK	●	●	●			✔	✔	✔	✔	✔	
			UP-NJ9232GK	●	●	●			✔	✔	✔	✔	✔	
			UP-NTU6238GKV	●	●	●			✔	✔	✔	✔	✔	
		2	UP-SE6015GK	●	●	●	●	●	✔	✔	✔	✔	✔	✔
			UP-SE6018GK	●	●	●	●	●	✔	✔	✔	✔	✔	✔
			UP-SE6021GK	●	●	●	●	●	✔	✔	✔	✔	✔	✔
	3~	1	UP-NJ9232GS	●	●	●			✔	✔	✔	✔	✔	
			UP-NJ9238GS	●	●	●			✔	✔	✔	✔	✔	
		2	UP-NJX6250GS	●	●	●			✔	✔	✔	✔	✔	
			UP-SE6015GS	●	●	●	●	●	✔	✔	✔	✔	✔	✔
			UP-SE6018GS	●	●	●	●	●	✔	✔	✔	✔	✔	✔
			UP-SE6021GS	●	●	●	●	●	✔	✔	✔	✔	✔	✔
		3	UP-SE6026GS	●	●	●	●	●	✔	✔	✔	✔	✔	✔
			UP-SE6030GS	●	●	●	●	●	✔	✔	✔	✔	✔	✔
			UP-SE6036GS	●	●	●	●	●	✔	✔	✔	✔	✔	✔
			UP-SE6043GS	●	●	●	●	●	✔	✔	✔	✔	✔	✔
	1~	1	UP-NEU6214Z				●	●	✔	✔	✔	✔	✔	
			UP-NJ6220Z				●	●	✔	✔	✔	✔	✔	
			UP-NJ6226Z				●	●	✔	✔	✔	✔	✔	
	3~		UP-NJ6226ZX				●	●	✔	✔	✔	✔	✔	
LBP	1~	1	UP-NT2180GK	●	●				✔	✔	✔	✔	✔	
			UP-NT2192GK	●	●				✔	✔	✔	✔	✔	
			UP-NT2212GK	●	●				✔	✔	✔	✔	✔	
		2	UP-SE2006GK	●	●	●			✔	✔	✔	✔	✔	✔
			UP-SE2008GK	●	●	●			✔	✔	✔	✔	✔	✔
			UP-SE2010GK	●	●	●			✔	✔	✔	✔	✔	✔
	3~	2	UP-NJX2219GS	●	●	●			✔	✔	✔	✔	✔	
			UP-SE2006GS	●	●	●			✔	✔	✔	✔	✔	✔
			UP-SE2008GS	●	●	●			✔	✔	✔	✔	✔	✔
			UP-SE2010GS	●	●	●			✔	✔	✔	✔	✔	✔
		3	UP-SE2012GS-O	●	●	●			✔	✔	✔	✔	✔	✔
			UP-SE2014GS-O	●	●	●			✔	✔	✔	✔	✔	✔
			UP-SE2017GS-O	●	●	●			✔	✔	✔	✔	✔	✔
			UP-SE2020GS-O	●	●	●			✔	✔	✔	✔	✔	✔

GENERAL DATA & PERFORMANCE

R452A - MBP - RTG20

CONDENSING UNITS				COMPRESSORS		AMBIENT TEMP.	EN13125 - SUBCOOLING 0K - MIDPOINT								POWER INPUT (W)								ECO DESIGN		DIMENSIONS (mm)			WEIGHT	ACOUSTICS dB (A)		CONDENSER/FAN						LIQUID RECEIVER	CONNECTION DIAMETERS			
							COOLING CAPACITY (W)																																		
CONDENSING UNITS MODELS	CONDENSING UNIT BOM	VOLTAGE SUPPLY (V)	I NOM (A)	COMPRESSOR MODELS	COMPRESSOR BOM	(°C)	-25°C	-20°C	-15°C	-10°C	-5°C	0°C	+5°C	+10°C	-25°C	-20°C	-15°C		-10°C	-5°C	0°C	+5°C	+10°C	Type	Cop/ Seer	W (width)	D (depth)	H (height)	Net (kg)	Sound Press. @10m	Sound power level	Number of fan	Fan diameter (mm)	Airflow (m^3/h)	Fan power (W)	Voltage supply (V)	Internal volume (dm^3)	dm^3	Suction (mm)	Liquid (mm)	Suction (")	Liquid (")
UP-NEU6212GK-EAE00	667HAS6C2FI	CP: 230V-1ph-50Hz Fan: 230V-1ph-50Hz	3,1	NEU6212GK-A-CSIR	958HA51M1AJ	25	-	660	807	979	1174	1388	1619	1863	-	417	452		484	514	544	572	601	COP	1,73	982	484	600	67	28	59	1	350	1695	67	230/1/50	0,23	1,6	10	6	3/8	1/4
						32	-	577	713	869	1045	1237	1442	1657	-	427	466		503	539	574	610	646																			
						38	-	506	631	774	933	1105	1288	1477	-	437	480		521	562	604	645	688																			
						43	-	-	564	696	841	996	1159	1327	-	-	493		538	584	629	676	724																			
UP-NEU6215GK-EAE00	669NAS6C4FI	CP: 230V-1ph-50Hz Fan: 230V-1ph-50Hz	2,8	NEU6215GK-A-CSR	959NA5190AF	25	-	887	1078	1296	1536	1794	2068	2352	-	504	559		613	669	726	787	853	COP	1,82	982	484	600	67	28	59	1	350	1695	67	230/1/50	0,23	1,6	10	6	3/8	1/4
						32	-	783	956	1152	1369	1602	1847	2101	-	522	578		636	697	762	832	909																			
						38	-	692	850	1029	1226	1437	1659	1887	-	535	595		658	725	797	877	965																			
						43	-	-	763	928	1109	1302	1504	1712	-	-	609		677	750	830	919	1017																			
UP-NT6222GK-EAE00	602CAS6C4FI	CP: 230V-1ph-50Hz Fan: 230V-1ph-50Hz	4,3	NT6222GK-A-CSR	922CA0404AF	25	-	1056	1301	1573	1868	2184	2518	2865	-	742	787		845	914	991	1074	1158	COP	1,6	982	484	600	69	29	60	1	350	1695	67	230/1/50	0,23	1,6	12	8	1/2	3/8
						32	-	922	1139	1378	1637	1915	2208	2516	-	756	811		860	950	1029	1111	1193																			
						38	-	-	1000	1211	1440	1685	1945	2218	-	-	836		905	980	1058	1138	1215																			
						43	-	-	-	1076	1279	1497	1729	1974	-	-	-		928	1003	1079	1155	1227																			
UP-NT6224GK-EAE00	622RAS6C4FI	CP: 230V-1ph-50Hz Fan: 230V-1ph-50Hz	4,5	NT6224GK-A-CSR	922RA0404AF	25	-	1278	1609	1976	2375	2799	3245	3707	-	801	868		937	1010	1086	1167	1252	COP	1,79	982	484	600	69	29	60	1	350	1523	67	230/1/50	0,45	2,3	12	8	1/2	3/8
						32	-	1136	1420	1740	2090	2468	2867	3285	-	821	896		973	1055	1140	1230	1324																			
						38	-	1005	1254	1538	1853	2195	2560	2943	-	843	923		1007	1095	1187	1283	1383																			
						43	-	-	1120	1378	1667	1982	2320	2677	-	-	948		1037	1129	1225	1325	1430																			
UP-NT6226GK-EAE00	603BAS6C4FI	CP: 230V-1ph-50Hz Fan: 230V-1ph-50Hz	4,8	NT6226GK-A-CSR	923BA0204AF	25	-	1420	1761	2146	2569	3024	3503	4000	-	823	901		983	1070	1162	1261	1369	COP	1,84	982	484	600	69	29	60	1	350	1523	67	230/1/50	0,45	2,3	12	8	1/2	3/8
						32	-	1243	1545	1889	2267	2674	3103	3548	-	854	939		1028	1121	1220	1326	1441																			
						38	-	1097	1367	1676	2016	2383	2771	3173	-	882	973		1067	1166	1271	1383	1504																			
						43	-	-	1232	1512	1821	2155	2508	2874	-	-	1000		1099	1203	1314	1431	1557																			
UP-NJ9232GK-EAE00	643NAS6C4FI	CP: 230V-1ph-50Hz Fan: 230V-1ph-50Hz	5,7	NJ9232GK-A-CSR	943NA1104AF	25	-	1476	1889	2342	2828	3339	3867	4407	-	1015	1113		1214	1320	1432	1555	1690	COP	1,64	982	484	600	76	30	61	1	350	1523	67	230/1/50	0,45	2,3	16	8	5/8	3/8
						32	-	1245	1614	2021	2459	2920	3399	3888	-	1007	1115		1227	1344	1470	1606	1755																			
						38	-	1052	1380	1745	2141	2560	2995	3439	-	1002	1117		1236	1362	1498	1644	1804																			
						43	-	-	-	1521	1880	2262	2659	3066	-	-	-		1242	1374	1516	1670	1838																			
UP-NJ9232GS-EAE00	647NMS6C3FI	CP: 400V-3ph-50Hz Fan: 230V-1ph-50Hz	2,1	NJ9232GS-M	947NM1101AA	25	-	1553	1956	2426	2951	3517	4112	4721	-	920	1025		1129	1236	1352	1479	1624	COP	1,85	982	484	600	76	30	61	1	350	1523	67	230/1/50	0,45	2,3	16	8	5/8	8
						32	-	1352	1715	2137	2606	3111	3639	4178	-	914	1031		1150	1275	1409	1558	1724																			
						38	-	1180	1507	1888	2310	2763	3234	3713	-	914	1040		1170	1308	1458	1622	1806																			
						43	-	-	-	1685	2067	2476	2901	3330	-	-	-		1188	1336	1496	1673	1870																			
UP-NTU6238GKV-EAE00	605EAS6C4FI	CP: 230V-1ph-50Hz Fan: 230V-1ph-50Hz	5,6	NTU6238GKV-A-CSR	925EA6004AF	25	-	1819	2198	2656	3168	3708	4255	4788	-	961	1042		1124	1210	1301	1400	1508	COP	1,97	982	484	600	76	30	61	1	350	1523	67	230/1/50	0,45	2,3	16	8	5/8	3/8
						32	-	1612	1946	2349	2799	3272	3746	4203	-	1008	1099		1192	1289	1393	1505	1626																			
						38	-	-	1729	2085	2482	2897	3310	3703	-	-	1144		1246	1354	1468	1591	1724																			
						43	-	-	-	1871	2223	2590	2951	3290	-	-	-		1288	1404	1527	1659	1801																			
UP-NJ9238GS-EAE00	647RMS6C3FI	CP: 400V-3ph-50Hz Fan: 230V-1ph-50Hz	2,9	NJ9238GS-M	947RM1101AA	25	-	1946	2429	2949	3499	4074	4668	5274	-	1108	1230		1354	1483	1624	1780	1957	COP	1,87	982	484	600	76	30	61	1	350	1523	67	230/1/50	0,45	2,3	16	8	5/8	3/8
						32	-	1687	2112	2574	3068	3586	4124	4674	-	1102	1238		1377	1525	1685	1862	2062																			
						38	-	-	1844	2256	2700	3170	3660	4163	-	-	1248		1399	1560	1735	1929	2148																			
						43	-	-	-	1998	2401	2831	3281	-	-	-	-		1417	1588	1775	1982	-																			
UP-NJX6250GS-EAE00	645BSS6C3FI	CP: 400V-3ph-50Hz Fan: 230V-1ph-50Hz	3,4	NJX6250GS-M	945BS2101AA	25	-	2621	3178	3821	4533	5299	6103	6930	-	1413	1564		1722	1891	2071	2264	2470	COP	1,88	1082	490	708	88	34	65	1	400	2673	120	230/1/50	0,71	3,9	16	10	5/8	3/8
						32	-	2336	2833	3404	4035	4712	5420	6146	-	1483	1646		1817	1998	2191	2396	2615																			
						38	-	2080	2530	3043	3608	4211	4839	5480	-	1525	1705		1892	2088	2296	2516	2750																			
						43	-	-	-	2744	3255	3798	4360	4931	-	-	-		1953	2165	2389	2625	2874																			
UP-SE6015GK-EAE00	6S1ACS6C4FI	CP: 230V-1ph-50Hz Fan: 230V-1ph-50Hz	8,5	SE6015GK-C	301AC1104AA	25	2330	2848	3445	4125	4887	5730	6649	7642	1469	1580	1702		1833	1972	2116	2264	2414	COP	1,86	1082	490	708	92	33	64	1	400	2673	120	230/1/50	0,71	3,9	18	12	5/8	1/2
						32	2095	2578	3128	3746	4436	5195	6023	6917	1620	1742	1876		2020	2172	2329	2490	2653																			
						38	1874	2329	2838	3406	4034	4723	5473	6283	1768	1899	2043		2197	2359	2527	2699	2872																			
						43	-	-	2581	3107	3685	4317	5003	5743	-	-	2198		2360	2530	2707	2887	3069																			
UP-SE6015GS-EAE00	6S1AOS6C3FI	CP: 400V-3ph-50Hz Fan: 230V-1ph-50Hz	3,2	SE6015GS-O	301AO1101AA	25	2331	2849	3448	4128	4891	5735	6656	7649	1445	1554	1673		1802	1938	2080	2225	2372	COP	1,89	1082	490	708	92	33	64	1	400	2673	120	230/1/50	0,71	3,9	18	12	3/4	1/2
						32	2097	2580	3130	3750	4440	5201	6030	6925	1593	1713	1845		1986	2134	2288	2446	2606																			
						38	1876	2332	2842	3410	4039	4729	5481	6293	1738	1867	2008		2159	2318	2483	2651	2822																			
						43	-	-	2585	3112	3691	4324	5012	5754	-	-	2160		2319	2486	2659	2836	3014																			
UP-SE6018GK-EAE00	6S1BCS6C4FI	CP: 230V-1ph-50Hz Fan: 230V-1ph-50Hz	10,2	SE6018GK-C	301BC1104AA	25	2779	3396	4108	4918	5824	6826	7919	9096	1695	1825	1968		2122	2285	2454	2628	2805	COP	1,91	1082	490	708	92	33	64	1	400	2545	120	230/1/50	0,91	3,9	18	12	3/4	1/2
						32	2499	3075	3729	4466	5286	6189	7173	8234	1871	2015	2172		2340	2518	2702	2891	3083																			
						38	2235	2778	3385	4060	4807	5627	6518	7479	2044	2198	2366		2547	2736	2933	3135	3339																			
						43	-	-	3078	3704	4392	5143	5958	6837	-	-	2546		2736	2936	3142	3354	3567																			
UP-SE6018GS-EAE00	6S1BOS6C3FI	CP: 400V-3ph-50Hz Fan: 230V-1ph-50Hz	4,7	SE6018GS-O	301BO1101AA	25	2784	3402	4116	4928	5837	6843	7940	9122	1616	1739	1874		2020	2174	2334	2499	2666	COP	2,02	1082	490	708	92	33	64	1	400	2545	120	230/1/50	0,91	3,9	18	12	3/4	1/2
						32	2505	3082	3739	4478	5301	6208	7197	8263	1782	1918	2067		2226	2394	2569	2748	2929																			
						38	2242	2786	3395	4073	4824	5648	6545	7512	1945	2091	2251		2422	2601	2788	2978	3171																			
						43	-	-	3090	3719	4411	5166	5987	6873	-	-	2421		2601	2790	2985	3185	3387																			
UP-SE6021GS-EAE00	6S1COS6C3FI	CP: 400V-3ph-50Hz Fan: 230V-1ph-50Hz	4,9	SE6021GS-O	301CO1101AA	25	3132	3821	4613	5508	6504	7597	8780	10046	1801	1943	2101		2272	2454	2645	2842	3044	COP	2	1082	490	708	92	33	64	1	400	2545	120	230/1/50	0,91	3,9	18	12	3/4	1/2
						32	2811	3455	4182	4996	5896	6879	7943	9081	1988	2145	2317		2503	2701	2907	3120	3336																			
						38	-	3116	3789	4535	5353	6245	7207	8237	-	2339	2524		2723	2933	3152	3377	3606																			
						43	-	-	3440	4130	4882	5698	6577	7518	-	-	2716		2925	3145	3373	3609	3848																			
UP-SE6026GS-EAE00	6S1GOS6C3FI	CP: 400V-3ph-50Hz Fan: 230V-1ph-50Hz	6,2	SE6026GS-O	301GO1101AA	25	4049	4955	6007	7212	8571	10084	11747	13554	2286	2451	2631		2823	3024	3232	3444	3656	SEPR	3,12	1277	538	1005	107	36	67	1	500	5195	220	230/1/50	1,34	6	22	16	7/8	5/8
						32	3652	4499	5468	6567	7800	9169	10672	12306	2516	2698	2897		3108	3329	3558	3789	4022																			
						38	3280	4079	4980	5990	7117	8364	9732	11218	2741	2937	3150		3377	3615	3859	4108	4357																			
						43	-	3702	4547	5486	6526	7673	8929	10294	-	3159	3384		3623	3874	4131	4393	4655																			
UP-SE6030GS-EAE00	6S1DOS6C3FI	CP: 400V-3ph-50Hz Fan: 230V-1ph-50Hz	6,6	SE6030GS-O	301DO1101AA	25	4548	5559	6728	8058	9551	11204	13008	14957	2510	2697	2903		3125	3359	3602	3851	4104	SEPR	3,14	1277	538	1005	107	36	67	1	500	5195	220	230/1/50	1,34	6	22	16	7/8	5/8
						32	4096	5040	6116	7329	8681	10174	11802	13561	2765	2971	3197		3440	3695	3960	4231	4505																			
						38	3671	4561	5560	6674	7909	9266	10745	12342	3013	3235	3478		3737	4010	4293	4582	4874																			
						43	-	-	5067	6101	7239	8485	9841	11305	-	-	3737		4010	4297	4594	4897	5202																			
UP-SE6036GS-EAE00	6S1EOS6C3FI	CP: 400V-3ph-50Hz Fan: 230V-1ph-50Hz	7,6	SE6036GS-O	301EO1101AA	25	5636	6895	8357	10028	11911	14006	16305	18801	2950	3169	3408		3664	3933	4211	4494	4779	SEPR	3,35	1277	538	1005	107	36	67	1	500	4739	220	230/1/50	2,23	6	22	16	7/8	5/8
						32	5083	6261	7608	9133	10842	12737	14816	17072	3254	3495	3759		4040	4335	4639	4948	5260																			
						38	4566	5677	6928	8331	9894	11620	13512	15566	3550	3809	4093		4394	4710	5036	5367	5700																			
						43	-	5152	6327	7630	9073	10662	12399	14286	-	4102	4401		4719	5051	5394	5743	6093																			
UP-SE6043GS-EAE00	6S1FOS6C3FI	CP: 400V-3ph-50Hz Fan: 230V-1ph-50Hz	8,6	SE6043GS-O	301FO1101AA	25	6593	8052	9733	11641	13772	16122	18677	21424	3520	3795	4098		4426	4772	5135	5508	5888	SEPR	3,21	1277	538	1005	107	36	67	1	500	4739	220	230/1/50	2,23	6	22	16	7/8	5/8
						32	5931	7293	8839	10576	12506	14626	16929	19405	3887	4189	4521		4878	5256	5649	6052	6463																			
						38	5308	6592	8026	9620	11380	13306	15395	17641	4245	4570	4926		5307	5710	6128	6557	6991																			
						43	-	-	7305	8783	10403	12170	14083	16139	-	-	5300		5701	6123	6561	7009	7463																			

embraco

Note: *Subject to modification without prior notification.*

GENERAL DATA & PERFORMANCE

R452A - MBP - SH10K

CONDENSING UNITS				COMPRESSORS		AMBIENT TEMP.	EN13125 - SUBCOOLING 0K - MIDPOINT COOLING CAPACITY (W)								POWER INPUT (W)								ECO DESIGN		DIMENSIONS (mm)			WEIGHT	ACOUSTICS dB (A)		CONDENSER/FAN						LIQUID RECEIVER	CONNECTION DIAMETERS			
CONDENSING UNITS MODELS	CONDENSING UNIT BOM	VOLTAGE SUPPLY (V)	I NOM (A)	COMPRESSOR MODELS	COMPRESSOR BOM	(°C)	-25°C	-20°C	-15°C	-10°C	-5°C	0°C	+5°C	+10°C	-25°C	-20°C	-15°C		-10°C	-5°C	0°C	+5°C	+10°C	Type	Cop/ Seer	W (width)	D (depth)	H (height)	Net (kg)	Sound Press. @10m	Sound power level	Number of fan	Fan diameter (mm)	Airflow (m^3/h)	Fan power (W)	Voltage supply (V)	Internal volume (dm^3)	dm^3	Suction (mm)	Liquid (mm)	Suction (")	Liquid (")
UP-NEU6212GK-EAE00	667HAS6C2FI	CP: 230V-1ph-50Hz Fan: 230V-1ph-50Hz	3,1	NEU6212GK-A-CSIR	958HA51M1AJ	25	-	627	773	947	1147	1368	1610	1869	-	414	448		480	511	541	571	602	-	-	982	484	600	67	28	59	1	350	1695	67	230/1/50	0,23	1,6	10	6	3/8	1/4
						32	-	540	675	834	1014	1214	1431	1662	-	423	461		498	535	571	608	647																			
						38	-	466	590	734	898	1079	1274	1482	-	432	474		515	557	599	643	689																			
						43	-	-	520	653	803	967	1144	1331	-	-	486		531	577	624	673	725																			
UP-NEU6215GK-EAE00	669NAS6C4FI	CP: 230V-1ph-50Hz Fan: 230V-1ph-50Hz	2,8	NEU6215GK-A-CSR	959NA5190AF	25	-	840	1031	1252	1497	1766	2055	2359	-	499	553		608	664	722	785	854	-	-	982	484	600	67	28	59	1	350	1695	67	230/1/50	0,23	1,6	10	6	3/8	1/4
						32	-	731	903	1102	1325	1569	1831	2108	-	515	571		629	691	757	829	910																			
						38	-	636	792	974	1177	1400	1639	1892	-	528	587		649	717	791	873	966																			
						43	-	-	702	869	1056	1261	1482	1716	-	-	600		667	741	823	914	1018																			
UP-NT6222GK-EAE00	602CAS6C4FI	CP: 230V-1ph-50Hz Fan: 230V-1ph-50Hz	4,3	NT6222GK-A-CSR	922CA0404AF	25	-	999	1242	1516	1818	2145	2494	2865	-	735	779		837	906	984	1069	1158	-	-	982	484	600	69	29	60	1	350	1695	67	230/1/50	0,23	1,6	12	8	1/2	3/8
						32	-	860	1074	1316	1582	1871	2183	2514	-	747	801		866	940	1021	1106	1193																			
						38	-	-	931	1144	1380	1638	1917	2216	-	-	824		892	968	1049	1132	1214																			
						43	-	-	-	1006	1216	1447	1699	1971	-	-	-		914	990	1069	1149	1226																			
UP-NT6224GK-EAE00	622RAS6C4FI	CP: 230V-1ph-50Hz Fan: 230V-1ph-50Hz	4,5	NT6224GK-A-CSR	922RA0404AF	25	-	1210	1540	1911	2317	2757	3225	3720	-	793	859		929	1002	1080	1164	1254	-	-	982	484	600	69	29	60	1	350	1523	67	230/1/50	0,45	2,3	12	8	1/2	3/8
						32	-	1061	1343	1666	2025	2419	2843	3296	-	811	885		963	1045	1133	1226	1325																			
						38	-	924	1170	1457	1781	2140	2531	2951	-	831	911		995	1083	1177	1278	1384																			
						43	-	-	1031	1291	1589	1922	2287	2683	-	-	934		1022	1115	1214	1319	1431																			
UP-NT6226GK-EAE00	603BAS6C4FI	CP: 230V-1ph-50Hz Fan: 230V-1ph-50Hz	4,8	NT6226GK-A-CSR	923BA0204AF	25	-	1345	1685	2074	2506	2977	3481	4012	-	814	892		974	1061	1155	1258	1371	-	-	982	484	600	69	29	60	1	350	1523	67	230/1/50	0,45	2,3	12	8	1/2	3/8
						32	-	1160	1461	1807	2195	2619	3075	3558	-	843	928		1016	1110	1211	1322	1443																			
						38	-	1007	1275	1586	1937	2322	2739	3181	-	869	959		1053	1153	1260	1378	1506																			
						43	-	-	1131	1414	1734	2088	2472	2881	-	-	984		1083	1188	1302	1424	1558																			
UP-NJ9232GK-EAE00	643NAS6C4FI	CP: 230V-1ph-50Hz Fan: 230V-1ph-50Hz	5,7	NJ9232GK-A-CSR	943NA1104AF	25	-	1399	1808	2262	2756	3284	3841	4420	-	1005	1103		1203	1309	1424	1550	1692	-	-	982	484	600	76	30	61	1	350	1523	67	230/1/50	0,45	2,3	16	8	5/8	3/8
						32	-	1164	1527	1934	2380	2860	3367	3897	-	996	1102		1214	1332	1460	1601	1757																			
						38	-	968	1288	1654	2057	2495	2959	3446	-	989	1102		1221	1348	1486	1637	1805																			
						43	-	-	1098	1426	1793	2193	2622	3072	-	-	-		1226	1359	1504	1663	1838																			
UP-NJ9232GS-EAE00	647NMS6C3FI	CP: 400V-3ph-50Hz Fan: 230V-1ph-50Hz	2,1	NJ9232GS-M	947NM1101AA	25	-	1469	1870	2341	2875	3459	4082	4734	-	912	1016		1119	1226	1343	1474	1627	-	-	982	484	600	76	30	61	1	350	1523	67	230/1/50	0,45	2,3	16	8	5/8	8
						32	-	1261	1620	2042	2521	3045	3604	4188	-	904	1020		1138	1262	1398	1551	1726																			
						38	-	1084	1405	1785	2217	2690	3195	3722	-	902	1026		1156	1294	1445	1614	1807																			
						43	-	-	-	1576	1968	2399	2858	3337	-	-	-		1171	1319	1482	1664	1871																			
UP-NTU6238GKV-EAE00	605EAS6C4FI	CP: 230V-1ph-50Hz Fan: 230V-1ph-50Hz	5,6	NTU6238GKV-A-CSR	925EA6004AF	25	-	1718	2099	2562	3085	3646	4225	4803	-	949	1029		1111	1197	1291	1395	1511	-	-	982	484	600	76	30	61	1	350	1523	67	230/1/50	0,45	2,3	16	8	5/8	3/8
						32	-	1501	1835	2244	2706	3201	3711	4216	-	993	1083		1175	1274	1380	1498	1629																			
						38	-	-	1608	1970	2381	2820	3271	3714	-	-	1126		1228	1336	1454	1583	1725																			
						43	-	-	-	1747	2115	2508	2909	3301	-	-	-		1267	1384	1511	1649	1802																			
UP-NJ9238GS-EAE00	647RMS6C3FI	CP: 400V-3ph-50Hz Fan: 230V-1ph-50Hz	2,9	NJ9238GS-M	947RM1101AA	25	-	1838	2319	2842	3404	4002	4631	5287	-	1098	1218		1341	1470	1612	1773	1959	-	-	982	484	600	76	30	61	1	350	1523	67	230/1/50	0,45	2,3	16	8	5/8	3/8
						32	-	1571	1992	2457	2963	3506	4081	4683	-	1089	1223		1361	1508	1670	1853	2064																			
						38	-	-	1715	2131	2588	3084	3613	4170	-	-	1230		1380	1541	1719	1919	2148																			
						43	-	-	-	1866	2283	2739	3230	-	-	-	-		1396	1568	1757	1971	-																			
UP-NJX6250GS-EAE00	645BSS6C3FI	CP: 400V-3ph-50Hz Fan: 230V-1ph-50Hz	3,4	NJX6250GS-M	945BS2101AA	25	-	2472	3035	3688	4418	5211	6055	6937	-	1402	1548		1704	1872	2054	2253	2469	-	-	1082	490	708	88	34	65	1	400	2673	120	230/1/50	0,71	3,9	16	10	5/8	3/8
						32	-	2184	2680	3256	3902	4607	5358	6144	-	1461	1622		1793	1976	2172	2385	2617																			
						38	-	1913	2358	2875	3456	4090	4767	5476	-	1503	1681		1867	2065	2277	2505	2751																			
						43	-	-	-	2562	3092	3671	4289	4936	-	-	-		1925	2138	2364	2607	2867																			
UP-SE6015GK-EAE00	6S1ACS6C4FI	CP: 230V-1ph-50Hz Fan: 230V-1ph-50Hz	8,5	SE6015GK-C	301AC1104AA	25	2169	2688	3289	3979	4761	5636	6604	7663	1450	1557	1677		1807	1948	2097	2254	2420	-	-	1082	490	708	92	33	64	1	400	2673	120	230/1/50	0,71	3,9	18	12	5/8	1/2
						32	1927	2401	2947	3572	4281	5076	5959	6929	1590	1710	1843		1988	2143	2307	2479	2659																			
						38	1688	2128	2631	3205	3856	4587	5402	6300	1733	1862	2004		2159	2325	2500	2683	2873																			
						43	1474	1888	2358	2893	3499	4180	4940	5781	1867	2001	2150		2312	2485	2668	2859	3056																			
UP-SE6015GS-EAE00	6S1AOS6C3FI	CP: 400V-3ph-50Hz Fan: 230V-1ph-50Hz	3,2	SE6015GS-O	301AO1101AA	25	2171	2690	3292	3983	4765	5641	6610	7671	1426	1532	1649		1777	1914	2061	2215	2378	-	-	1082	490	708	92	33	64	1	400	2673	120	230/1/50	0,71	3,9	18	12	3/4	1/2
						32	1929	2403	2950	3576	4286	5082	5966	6938	1564	1681	1812		1954	2106	2267	2436	2613																			
						38	1690	2130	2634	3209	3861	4594	5410	6310	1704	1830	1970		2122	2284	2456	2636	2822																			
						43	1477	1891	2362	2898	3504	4187	4948	5791	1835	1967	2113		2272	2442	2621	2808	3002																			
UP-SE6018GK-EAE00	6S1BCS6C4FI	CP: 230V-1ph-50Hz Fan: 230V-1ph-50Hz	10,2	SE6018GK-C	301BC1104AA	25	2588	3206	3922	4744	5674	6714	7864	9121	1672	1799	1939		2092	2256	2432	2617	2811	-	-	1082	490	708	92	33	64	1	400	2545	120	230/1/50	0,91	3,9	18	12	3/4	1/2
						32	2299	2863	3514	4258	5101	6047	7096	8249	1836	1977	2132		2302	2484	2676	2879	3090																			
						38	2013	2537	3137	3821	4595	5465	6433	7501	2003	2154	2320		2502	2695	2901	3116	3339																			
						43	1759	2252	2812	3449	4170	4980	5884	6884	2159	2316	2491		2680	2882	3096	3320	3552																			
UP-SE6018GS-EAE00	6S1BOS6C3FI	CP: 400V-3ph-50Hz Fan: 230V-1ph-50Hz	4,7	SE6018GS-O	301BO1101AA	25	2592	3212	3930	4754	5687	6731	7885	9148	1594	1714	1847		1991	2147	2313	2488	2672	-	-	1082	490	708	92	33	64	1	400	2545	120	230/1/50	0,91	3,9	18	12	3/4	1/2
						32	2305	2871	3524	4271	5117	6066	7120	8278	1749	1882	2030		2190	2362	2545	2736	2936																			
						38	2021	2547	3148	3834	4612	5487	6459	7532	1907	2050	2208		2379	2563	2757	2961	3172																			
						43	1767	2262	2825	3464	4188	5003	5912	6917	2055	2204	2369		2548	2740	2942	3154	3374																			
UP-SE6021GS-EAE00	6S1COS6C3FI	CP: 400V-3ph-50Hz Fan: 230V-1ph-50Hz	4,9	SE6021GS-O	301CO1101AA	25	2916	3606	4401	5308	6329	7464	8712	10069	1773	1912	2067		2237	2421	2619	2829	3052	-	-	1082	490	708	92	33	64	1	400	2545	120	230/1/50	0,91	3,9	18	12	3/4	1/2
						32	2583	3213	3934	4756	5681	6714	7853	9098	1949	2102	2273		2460	2662	2877	3104	3343																			
						38	2258	2842	3507	4261	5112	6062	7115	8268	2126	2290	2472		2671	2885	3112	3352	3602																			
						43	1969	2519	3140	3843	4635	5521	6504	7586	2291	2462	2652		2859	3081	3317	3565	3823																			
UP-SE6026GS-EAE00	6S1GOS6C3FI	CP: 400V-3ph-50Hz Fan: 230V-1ph-50Hz	6,2	SE6026GS-O	301GO1101AA	25	3769	4679	5741	6965	8360	9930	11677	13599	2261	2421	2597		2788	2991	3205	3429	3662	-	-	1277	538	1005	107	36	67	1	500	5195	220	230/1/50	1,34	6	22	16	7/8	5/8
						32	3366	4199	5165	6277	7544	8973	10569	12333	2473	2651	2849		3061	3288	3526	3775	4032																			
						38	2963	3737	4629	5651	6816	8133	9607	11242	2690	2882	3094		3323	3566	3822	4089	4363																			
						43	2600	3330	4164	5117	6202	7430	8807	10339	2895	3096	3318		3558	3813	4081	4360	4648																			
UP-SE6030GS-EAE00	6S1DOS6C3FI	CP: 400V-3ph-50Hz Fan: 230V-1ph-50Hz	6,6	SE6030GS-O	301DO1101AA	25	4235	5249	6426	7777	9308	11024	12922	15000	2478	2660	2862		3082	3318	3569	3834	4112	-	-	1277	538	1005	107	36	67	1	500	5195	220	230/1/50	1,34	6	22	16	7/8	5/8
						32	3771	4698	5768	6994	8384	9945	11679	13586	2714	2917	3141		3385	3646	3923	4214	4516																			
						38	3311	4172	5159	6286	7565	9003	10605	12373	2955	3172	3413		3674	3953	4248	4556	4877																			
						43	2900	3711	4634	5685	6876	8217	9714	11371	3180	3407	3659		3932	4223	4531	4852	5185																			
UP-SE6036GS-EAE00	6S1EOS6C3FI	CP: 400V-3ph-50Hz Fan: 230V-1ph-50Hz	7,6	SE6036GS-O	301EO1101AA	25	5246	6511	7985	9684	11617	13791	16206	18862	2917	3129	3363		3617	3888	4174	4475	4787	-	-	1277	538	1005	107	36	67	1	500	4739	220	230/1/50	2,23	6	22	16	7/8	5/8
						32	4685	5844	7185	8727	10484	12463	14671	17108	3196	3433	3695		3978	4279	4597	4929	5273																			
						38	4125	5201	6439	7858	9474	11299	13339	15599	3483	3737	4018		4322	4646	4986	5341	5708																			
						43	3621	4636	5794	7117	8623	10324	12231	14350	3751	4018	4312		4631	4970	5327	5698	6081																			
UP-SE6043GS-EAE00	6S1FOS6C3FI	CP: 400V-3ph-50Hz Fan: 230V-1ph-50Hz	8,6	SE6043GS-O	301FO1101AA	25	6140	7601	9292	11227	13413	15853	18544	21480	3471	3738	4035		4360	4711	5086	5484	5902	-	-	1277	538	1005	107	36	67	1	500	4739	220	230/1/50	2,23	6	22	16	7/8	5/8
						32	5456	6792	8328	10082	12066	14287	16745	19440	3812	4108	4438		4797	5183	5593	6026	6478																			
						38	4783	6023	7439	9053	10877	12923	15194	17694	4159	4476	4828		5211	5622	6057	6515	6991																			
						43	4183	5351	6676	8179	9879	11787	13910	16254	4482	4813	5181		5581	6009	6462	6936	7430																			

embraco

Note: *Subject to modification without prior notification.*

GENERAL DATA & PERFORMANCE

R449A - MBP - RTG20

CONDENSING UNITS				COMPRESSORS		AMBIENT TEMP.	EN13125 - SUBCOOLING 0K - MIDPOINT COOLING CAPACITY (W)								POWER INPUT (W)									ECO DESIGN		DIMENSIONS (mm)			WEIGHT	ACOUSTICS dB (A)		CONDENSER/FAN						LIQUID RECEIVER	CONNECTION DIAMETERS			
CONDENSING UNITS MODELS	CONDENSING UNIT BOM	VOLTAGE SUPPLY (V)	I NOM (A)	COMPRESSOR MODELS	COMPRESSOR BOM	(°C)	-25°C	-20°C	-15°C	-10°C	-5°C	0°C	+5°C	+10°C	-25°C	-20°C	-15°C		-10°C	-5°C	0°C	+5°C	+10°C	Type	Cop/ Seer	W (width)	D (depth)	H (height)	Net (kg)	Sound Press. @10m	Sound power level	Number of fan	Fan diameter (mm)	Airflow (m^2/h)	Fan power (W)	Voltage supply (V)	Internal volume (dm^3)	dm^3	Suction (mm)	Liquid (mm)	Suction (")	Liquid (")
UP-NEU6212GK-EAE00	667HAS6C2FI	CP: 230V-1ph-50Hz Fan: 230V-1ph-50Hz	3,1	NEU6212GK-A-CSIR	958HA51M1AJ	25	-	-	732	899	1094	1317	1568	1843	-	-	438		456	473	493	518	552	COP	1,76	982	484	600	67	28	59	1	350	1695	67	230/1/50	0,23	1,6	10	6	3/8	1/4
						32	-	-	656	819	1006	1217	1449	1700	-	-	418		453	488	525	565	610																				
						38	-	-	601	754	927	1119	1328	1553	-	-	432		478	521	565	609	655																				
						43	-	-	-	694	851	1024	1211	1412	-	-	-		504	549	592	635	678																				
UP-NEU6215GK-EAE00	669NAS6C4FI	CP: 230V-1ph-50Hz Fan: 230V-1ph-50Hz	2,8	NEU6215GK-A-CSR	959NA5190AF	25	-	-	991	1210	1461	1744	2056	2391	-	-	515		562	611	664	721	784	COP	1,84	982	484	600	67	28	59	1	350	1695	67	230/1/50	0,23	1,6	10	6	3/8	1/4
						32	-	-	895	1104	1341	1603	1886	2188	-	-	535		587	643	703	770	845																				
						38	-	-	824	1016	1231	1466	1719	1985	-	-	555		612	675	742	818	902																				
						43	-	-	-	-	1126	1334	1556	1789	-	-	-		-	702	777	860	953																				
UP-NT6222GK-EAE00	602CAS6C4FI	CP: 230V-1ph-50Hz Fan: 230V-1ph-50Hz	4,3	NT6222GK-A-CSR	922CA0404AF	25	-	-	1205	1485	1798	2138	2502	2885	-	-	-		-	851	923	1000	1080	COP	1,63	982	484	600	69	29	60	1	350	1695	67	230/1/50	0,23	1,6	12	8	1/2	3/8
						32	-	-	1090	1342	1619	1919	2239	2574	-	-	762		823	893	968	1045	1123																				
						38	-	-	-	1208	1452	1716	1996	2290	-	-	-		854	927	1003	1080	1156																				
						43	-	-	-	-	1300	1533	1780	2040	-	-	-		-	954	1031	1107	1181																				
UP-NT6224GK-EAE00	622RAS6C4FI	CP: 230V-1ph-50Hz Fan: 230V-1ph-50Hz	4,5	NT6224GK-A-CSR	922RA0404AF	25	-	-	1470	1834	2238	2677	3147	3645	-	-	803		865	930	999	1071	1147	COP	1,79	982	484	600	69	29	60	1	350	1523	67	230/1/50	0,45	2,3	12	8	1/2	3/8
						32	-	-	1335	1660	2023	2420	2846	3300	-	-	837		907	981	1058	1139	1224																				
						38	-	-	1217	1511	1840	2201	2591	3007	-	-	866		944	1024	1109	1197	1290																				
						43	-	-	-	-	1680	2013	2374	2759	-	-	-		-	1061	1152	1248	1347																				
UP-NT6226GK-EAE00	603BAS6C4FI	CP: 230V-1ph-50Hz Fan: 230V-1ph-50Hz	4,8	NT6226GK-A-CSR	923BA0204AF	25	-	-	1617	2012	2461	2955	3488	4048	-	-	829		901	978	1061	1152	1251	COP	1,88	982	484	600	69	29	60	1	350	1523	67	230/1/50	0,45	2,3	12	8	1/2	3/8
						32	-	-	1473	1832	2237	2680	3154	3650	-	-	872		951	1036	1128	1226	1333																				
						38	-	-	1350	1675	2038	2433	2853	3292	-	-	906		993	1086	1184	1290	1403																				
						43	-	-	-	-	1859	2212	2586	2975	-	-	-		-	1127	1232	1344	1464																				
UP-NJ9232GK-EAE00	643NAS6C4FI	CP: 230V-1ph-50Hz Fan: 230V-1ph-50Hz	5,7	NJ9232GK-A-CSR	943NA1104AF	25	-	-	1830	2312	2853	3442	4071	4728	-	-	936		1025	1117	1215	1322	1443	COP	1,91	982	484	600	76	30	61	1	350	1523	67	230/1/50	0,45	2,3	16	8	5/8	3/8
						32	-	-	1642	2082	2574	3109	3676	4265	-	-	961		1063	1170	1285	1412	1554																				
						38	-	-	-	1884	2330	2812	3321	3849	-	-	-		1096	1218	1349	1493	1653																				
						43	-	-	-	-	2110	2547	3007	3481	-	-	-		-	1257	1402	1562	1738																				
UP-NJ9232GS-EAE00	647NMS6C3FI	CP: 400V-3ph-50Hz Fan: 230V-1ph-50Hz	2,1	NJ9232GS-M	947NM1101AA	25	-	-	1830	2311	2851	3439	4066	4719	-	-	938		1035	1133	1237	1353	1487	COP	1,89	982	484	600	76	30	61	1	350	1523	67	230/1/50	0,45	2,3	16	8	5/8	8
						32	-	-	1642	2082	2573	3106	3670	4254	-	-	963		1070	1183	1306	1445	1606																				
						38	-	-	-	1884	2328	2809	3315	3836	-	-	-		1100	1227	1367	1527	1712																				
						43	-	-	-	-	2109	2544	3000	3466	-	-	-		-	1264	1419	1596	1801																				
UP-NTU6238GKV-EAE00	605EAS6C4FI	CP: 230V-1ph-50Hz Fan: 230V-1ph-50Hz	5,6	NTU6238GKV-A-CSR	925EA6004AF	25	-	-	2059	2541	3089	3676	4279	4874	-	-	965		1039	1117	1201	1293	1394	COP	2,03	982	484	600	76	30	61	1	350	1523	67	230/1/50	0,45	2,3	16	8	5/8	3/8
						32	-	-	1888	2322	2808	3323	3844	4352	-	-	1027		1111	1201	1298	1404	1519																				
						38	-	-	-	2113	2543	2992	3441	3871	-	-	-		1168	1270	1380	1498	1627																				
						43	-	-	-	-	2297	2689	3077	3444	-	-	-		-	1326	1447	1577	1718																				
UP-NJ9238GS-EAE00	647RMS6C3FI	CP: 400V-3ph-50Hz Fan: 230V-1ph-50Hz	2,9	NJ9238GS-M	947RM1101AA	25	-	-	2292	2832	3410	4020	4661	5327	-	-	1131		1245	1363	1490	1634	1803	COP	1,92	982	484	600	76	30	61	1	350	1523	67	230/1/50	0,45	2,3	16	8	5/8	3/8
						32	-	-	2044	2531	3055	3611	4195	4802	-	-	1158		1284	1419	1567	1738	1937																				
						38	-	-	-	2263	2736	3240	3771	4323	-	-	-		1317	1467	1635	1828	2054																				
						43	-	-	-	-	-	2908	3393	-	-	-	-		-	-	1691	1903	-																				
UP-NJX6250GS-EAE00	645BSS6C3FI	CP: 400V-3ph-50Hz Fan: 230V-1ph-50Hz	3,4	NJX6250GS-M	945BS2101AA	25	-	-	3002	3685	4453	5290	6180	7107	-	-	1447		1599	1760	1932	2115	2312	COP	1,93	1082	490	708	88	34	65	1	400	2673	120	230/1/50	0,71	3,9	16	10	5/8	3/8
						32	-	-	2715	3329	4018	4767	5562	6388	-	-	1530		1696	1871	2059	2260	2475																				
						38	-	-	-	3011	3635	4311	5026	5766	-	-	-		1775	1968	2173	2392	2627																				
						43	-	-	-	-	3313	3929	4578	5248	-	-	-		-	2050	2273	2511	2763																				
UP-SE6015GK-EAE00	6S1ACS6C4FI	CP: 230V-1ph-50Hz Fan: 230V-1ph-50Hz	8,5	SE6015GK-C	301AC1104AA	25	2365	2886	3475	4142	4894	5738	6676	7710	1386	1487	1599		1720	1851	1992	2142	2301	COP	1,96	1082	490	708	92	33	64	1	400	2673	120	230/1/50	0,71	3,9	18	12	5/8	1/2
						32	-	2656	3199	3810	4496	5264	6120	7065	-	1649	1774		1909	2054	2210	2375	2552																				
						38	-	-	2931	3497	4129	4836	5623	6493	-	-	1953		2102	2262	2432	2613	2807																				
						43	-	-	-	3211	3801	4459	5190	6000	-	-	-		2293	2466	2650	2846	3055																				
UP-SE6015GS-EAE00	6S1AOS6C3FI	CP: 400V-3ph-50Hz Fan: 230V-1ph-50Hz	3,2	SE6015GS-O	301AO1101AA	25	2366	2888	3477	4144	4897	5742	6681	7717	1364	1463	1572		1691	1820	1958	2105	2261	COP	2	1082	490	708	92	33	64	1	400	2673	120	230/1/50	0,71	3,9	18	12	3/4	1/2
						32	-	2658	3202	3813	4499	5269	6126	7072	-	1621	1744		1877	2019	2171	2334	2507																				
						38	-	-	2934	3500	4134	4842	5630	6502	-	-	1919		2066	2222	2389	2567	2757																				
						43	-	-	-	3215	3806	4465	5198	6009	-	-	-		2252	2422	2603	2795	2999																				
UP-SE6018GK-EAE00	6S1BCS6C4FI	CP: 230V-1ph-50Hz Fan: 230V-1ph-50Hz	10,2	SE6018GK-C	301BC1104AA	25	2822	3442	4144	4937	5832	6835	7950	9177	1599	1718	1848		1991	2145	2310	2486	2674	COP	2,02	1082	490	708	92	33	64	1	400	2545	120	230/1/50	0,91	3,9	18	12	3/4	1/2
						32	-	3167	3814	4541	5357	6271	7287	8409	-	1906	2053		2211	2382	2565	2760	2968																				
						38	-	-	3494	4168	4920	5760	6695	7728	-	-	2262		2437	2624	2824	3038	3266																				
						43	-	-	-	3826	4528	5310	6179	7140	-	-	-		2660	2863	3079	3310	3556																				
UP-SE6018GS-EAE00	6S1BOS6C3FI	CP: 400V-3ph-50Hz Fan: 230V-1ph-50Hz	4,7	SE6018GS-O	301BO1101AA	25	2825	3447	4150	4945	5843	6849	7967	9199	1524	1637	1761		1896	2041	2198	2365	2543	COP	2,13	1082	490	708	92	33	64	1	400	2545	120	230/1/50	0,91	3,9	18	12	3/4	1/2
						32	-	3173	3822	4551	5369	6286	7307	8434	-	1815	1954		2104	2266	2438	2623	2819																				
						38	-	-	3504	4179	4935	5779	6718	7757	-	-	2151		2317	2494	2683	2885	3100																				
						43	-	-	-	3840	4546	5332	6205	7172	-	-	-		2527	2718	2923	3141	3372																				
UP-SE6021GS-EAE00	6S1COS6C3FI	CP: 400V-3ph-50Hz Fan: 230V-1ph-50Hz	4,9	SE6021GS-O	301CO1101AA	25	3187	3883	4664	5544	6531	7630	8845	10174	1699	1829	1974		2133	2305	2491	2692	2908	COP	2,1	1082	490	708	92	33	64	1	400	2545	120	230/1/50	0,91	3,9	18	12	3/4	1/2
						32	-	3564	4285	5090	5989	6989	8095	9309	-	2031	2193		2370	2561	2767	2989	3228																				
						38	-	-	3916	4662	5489	6408	7424	8540	-	-	2419		2613	2823	3049	3292	3553																				
						43	-	-	-	4270	5041	5895	6838	7875	-	-	-		2854	3082	3326	3588	3870																				
UP-SE6026GS-EAE00	6S1GOS6C3FI	CP: 400V-3ph-50Hz Fan: 230V-1ph-50Hz	6,2	SE6026GS-O	301GO1101AA	25	4097	5006	6040	7218	8555	10063	11751	13623	2158	2308	2471		2649	2839	3042	3256	3481	SEPR	3,26	1277	538	1005	107	36	67	1	500	5195	220	230/1/50	1,34	6	22	16	7/8	5/8
						32	-	4623	5580	6660	7882	9259	10803	12518	-	2552	2736		2933	3143	3366	3602	3851																				
						38	-	-	5133	6137	7267	8537	9961	11547	-	-	3002		3219	3450	3694	3951	4223																				
						43	-	-	4716	5661	6718	7904	9232	10712	-	-	3266		3501	3750	4013	4291	4584																				
UP-SE6030GS-EAE00	6S1DOS6C3FI	CP: 400V-3ph-50Hz Fan: 230V-1ph-50Hz	6,6	SE6030GS-O	301DO1101AA	25	4613	5631	6782	8087	9562	11216	13058	15090	2369	2539	2727		2931	3152	3388	3640	3907	SEPR	3,28	1277	538	1005	107	36	67	1	500	5195	220	230/1/50	1,34	6	22	16	7/8	5/8
						32	-	5189	6253	7449	8796	10305	11988	13848	-	2811	3021		3248	3492	3753	4030	4325																				
						38	-	-	5740	6850	8093	9484	11035	12752	-	-	3320		3570	3837	4122	4426	4748																				
						43	-	-	-	6304	7466	8762	10207	11807	-	-	-		3887	4176	4484	4811	5158																				
UP-SE6036GS-EAE00	6S1EOS6C3FI	CP: 400V-3ph-50Hz Fan: 230V-1ph-50Hz	7,6	SE6036GS-O	301EO1101AA	25	5702	6967	8403	10037	11889	13977	16310	18895	2782	2981	3199		3436	3690	3961	4248	4551	SEPR	3,51	1277	538	1005	107	36	67	1	500	4739	220	230/1/50	2,23	6	22	16	7/8	5/8
						32	-	6433	7761	9260	10954	12860	14994	17364	-	3304	3548		3811	4091	4390	4706	5039																				
						38	-	-	7140	8532	10098	11857	13827	16017	-	-	3900		4189	4496	4822	5167	5532																				
						43	-	-	6559	7870	9335	10977	12814	14859	-	-	4249		4561	4893	5245	5616	6008																				
UP-SE6043GS-EAE00	6S1FOS6C3FI	CP: 400V-3ph-50Hz Fan: 230V-1ph-50Hz	8,6	SE6043GS-O	301FO1101AA	25	6698	8167	9825	11698	13807	16165	18780	21654	3318	3569	3846		4149	4476	4829	5207	5610	SEPR	3,35	1277	538	1005	107	36	67	1	500	4739	220	230/1/50	2,23	6	22	16	7/8	5/8
						32	-	7515	9046	10762	12686	14835	17222	19851	-	3962	4272		4608	4971	5360	5777	6222																				
						38	-	-	8290	9881	11656	13635	15832	18256	-	-	4707		5077	5475	5901	6356	6843																				
						43	-	-	-	9077	10735	12578	14622	16879	-	-	-		5540	5970	6430	6921	7445																				

embraco

Note: *Subject to modification without prior notification.*

GENERAL DATA & PERFORMANCE

R449A - MBP - SH10K

CONDENSING UNITS				COMPRESSORS		AMBIENT TEMP.	EN13125 - SUBCOOLING OK - MIDPOINT COOLING CAPACITY (W)								POWER INPUT (W)									ECO DESIGN		DIMENSIONS (mm)			WEIGHT	ACOUSTICS dB (A)		CONDENSER/FAN						LIQUID RECEIVER	CONNECTION DIAMETERS			
CONDENSING UNITS MODELS	CONDENSING UNIT BOM	VOLTAGE SUPPLY (V)	I NOM (A)	COMPRESSOR MODELS	COMPRESSOR BOM	(°C)	-25°C	-20°C	-15°C	-10°C	-5°C	0°C	+5°C	+10°C	-25°C	-20°C	-15°C		-10°C	-5°C	0°C	+5°C	+10°C	Type	Cop/ Seer	W (width)	D (depth)	H (height)	Net (kg)	Sound Press. @10m	Sound power level	Number of fan	Fan diameter (mm)	Airflow (m^3/h)	Fan power (W)	Voltage supply (V)	Internal volume (dm^3)	dm^3	Suction (mm)	Liquid (mm)	Suction (ª)	Liquid (ª)
UP-NEU6212GK-EAE00	667HAS6C2FI	CP: 230V-1ph-50Hz Fan: 230V-1ph-50Hz	3,1	NEU6212GK-A-CSIR	958HA51M1AJ	25	-	-	717	887	1085	1313	1569	1850	-	-	428		450	471	495	524	559	-	-	982	484	600	67	28	59	1	350	1695	67	230/1/50	0,23	1,6	10	6	3/8	1/4
						32	-	-	645	808	996	1209	1445	1703	-	-	422		457	492	527	566	610																				
						38	-	-	583	735	910	1105	1320	1554	-	-	429		473	515	557	601	649																				
						43	-	-	-	671	830	1008	1204	1415	-	-	-		494	539	585	631	679																				
UP-NEU6215GK-EAE00	669NAS6C4FI	CP: 230V-1ph-50Hz Fan: 230V-1ph-50Hz	2,8	NEU6215GK-A-CSR	959NA5190AF	25	-	-	974	1197	1452	1739	2056	2399	-	-	512		560	610	663	721	786	-	-	982	484	600	67	28	59	1	350	1695	67	230/1/50	0,23	1,6	10	6	3/8	1/4
						32	-	-	878	1087	1324	1588	1877	2188	-	-	533		585	640	700	768	844																				
						38	-	-	795	987	1204	1445	1706	1987	-	-	551		608	669	738	815	903																				
						43	-	-	-	-	1098	1316	1553	1805	-	-	-		-	697	773	859	957																				
UP-NT6222GK-EAE00	602CAS6C4FI	CP: 230V-1ph-50Hz Fan: 230V-1ph-50Hz	4,3	NT6222GK-A-CSR	922CA0404AF	25	-	-	1184	1465	1779	2123	2494	2886	-	-	730		783	847	919	998	1080	-	-	982	484	600	69	29	60	1	350	1695	67	230/1/50	0,23	1,6	12	8	1/2	3/8
						32	-	-	1062	1314	1594	1899	2227	2573	-	-	757		818	887	963	1043	1123																				
						38	-	-	-	1176	1423	1693	1982	2289	-	-	-		848	920	998	1077	1156																				
						43	-	-	-	-	1269	1508	1765	2039	-	-	-		-	947	1025	1103	1180																				
UP-NT6224GK-EAE00	622RAS6C4FI	CP: 230V-1ph-50Hz Fan: 230V-1ph-50Hz	4,5	NT6224GK-A-CSR	922RA0404AF	25	-	-	1444	1814	2223	2669	3148	3657	-	-	799		861	926	995	1069	1148	-	-	982	484	600	69	29	60	1	350	1523	67	230/1/50	0,45	2,3	12	8	1/2	3/8
						32	-	-	1308	1634	1999	2400	2836	3303	-	-	831		902	976	1054	1137	1226																				
						38	-	-	1176	1470	1802	2171	2574	3009	-	-	860		938	1019	1105	1196	1292																				
						43	-	-	-	-	1639	1984	2363	2774	-	-	-		-	1055	1147	1244	1347																				
UP-NT6226GK-EAE00	603BAS6C4FI	CP: 230V-1ph-50Hz Fan: 230V-1ph-50Hz	4,8	NT6226GK-A-CSR	923BA0204AF	25	-	-	1590	1990	2444	2945	3486	4058	-	-	825		896	973	1057	1150	1253	-	-	982	484	600	69	29	60	1	350	1523	67	230/1/50	0,45	2,3	12	8	1/2	3/8
						32	-	-	1442	1801	2207	2656	3139	3652	-	-	865		945	1031	1123	1224	1335																				
						38	-	-	1303	1628	1995	2399	2835	3297	-	-	900		987	1080	1180	1288	1405																				
						43	-	-	-	-	1814	2182	2579	2998	-	-	-		-	1119	1225	1339	1462																				
UP-NJ9232GK-EAE00	643NAS6C4FI	CP: 230V-1ph-50Hz Fan: 230V-1ph-50Hz	5,7	NJ9232GK-A-CSR	943NA1104AF	25	-	-	1802	2288	2833	3428	4064	4734	-	-	931		1020	1112	1211	1321	1445	-	-	982	484	600	76	30	61	1	350	1523	67	230/1/50	0,45	2,3	16	8	5/8	3/8
						32	-	-	1608	2044	2535	3074	3654	4265	-	-	956		1057	1164	1279	1408	1555																				
						38	-	-	-	1827	2276	2771	3303	3867	-	-	-		1088	1209	1342	1489	1655																				
						43	-	-	-	-	2062	2521	3016	3541	-	-	-		-	1248	1395	1559	1744																				
UP-NJ9232GS-EAE00	647NMS6C3FI	CP: 400V-3ph-50Hz Fan: 230V-1ph-50Hz	2,1	NJ9232GS-M	947NM1101AA	25	-	-	1802	2287	2831	3424	4059	4725	-	-	933		1030	1128	1233	1351	1489	-	-	982	484	600	76	30	61	1	350	1523	67	230/1/50	0,45	2,3	16	8	5/8	8
						32	-	-	1608	2043	2534	3071	3648	4254	-	-	957		1064	1176	1300	1441	1607																				
						38	-	-	-	1827	2275	2768	3297	3855	-	-	-		1092	1219	1360	1523	1714																				
						43	-	-	-	-	2061	2518	3010	3529	-	-	-		-	1255	1412	1594	1808																				
UP-NTU6238GKV-EAE00	605EAS6C4FI	CP: 230V-1ph-50Hz Fan: 230V-1ph-50Hz	5,6	NTU6238GKV-A-CSR	925EA6004AF	25	-	-	2025	2510	3061	3655	4269	4882	-	-	959		1032	1110	1195	1290	1397	-	-	982	484	600	76	30	61	1	350	1523	67	230/1/50	0,45	2,3	16	8	5/8	3/8
						32	-	-	1841	2274	2764	3287	3825	4356	-	-	1019		1103	1194	1293	1402	1522																				
						38	-	-	-	2051	2488	2952	3424	3886	-	-	-		1160	1262	1373	1494	1627																				
						43	-	-	-	-	2245	2659	3077	3482	-	-	-		-	1314	1435	1567	1711																				
UP-NJ9238GS-EAE00	647RMS6C3FI	CP: 400V-3ph-50Hz Fan: 230V-1ph-50Hz	2,9	NJ9238GS-M	947RM1101AA	25	-	-	2258	2799	3378	3993	4644	5328	-	-	1125		1239	1356	1484	1630	1804	-	-	982	484	600	76	30	61	1	350	1523	67	230/1/50	0,45	2,3	16	8	5/8	3/8
						32	-	-	1993	2476	3001	3565	4169	4809	-	-	1151		1276	1410	1559	1732	1939																				
						38	-	-	-	2192	2674	3198	3764	4368	-	-	-		1307	1456	1626	1824	2061																				
						43	-	-	-	-	-	2896	3431	-	-	-	-		-	-	1684	1904	-																				
UP-NJX6250GS-EAE00	645BSS6C3FI	CP: 400V-3ph-50Hz Fan: 230V-1ph-50Hz	3,4	NJX6250GS-M	945BS2101AA	25	-	-	2952	3637	4410	5257	6162	7112	-	-	1442		1591	1751	1923	2109	2312	-	-	1082	490	708	88	34	65	1	400	2673	120	230/1/50	0,71	3,9	16	10	5/8	3/8
						32	-	-	2651	3266	3961	4721	5535	6388	-	-	1519		1684	1860	2049	2254	2476																				
						38	-	-	-	2933	3564	4254	4991	5764	-	-	-		1763	1956	2163	2386	2627																				
						43	-	-	-	-	3233	3865	4541	5248	-	-	-		-	2036	2260	2500	2759																				
UP-SE6015GK-EAE00	6S1ACS6C4FI	CP: 230V-1ph-50Hz Fan: 230V-1ph-50Hz	8,5	SE6015GK-C	301AC1104AA	25	2298	2822	3414	4086	4847	5704	6662	7724	1380	1478	1586		1706	1838	1981	2137	2306	-	-	1082	490	708	92	33	64	1	400	2673	120	230/1/50	0,71	3,9	18	12	5/8	1/2
						32	2091	2574	3116	3730	4425	5210	6091	7073	1520	1633	1757		1893	2041	2200	2373	2559																				
						38	1864	2319	2825	3395	4041	4771	5592	6510	1673	1798	1935		2084	2245	2418	2605	2805																				
						43	1646	2082	2563	3101	3709	4397	5172	6041	1823	1959	2106		2266	2438	2622	2820	3032																				
UP-SE6015GS-EAE00	6S1AOS6C3FI	CP: 400V-3ph-50Hz Fan: 230V-1ph-50Hz	3,2	SE6015GS-O	301AO1101AA	25	2300	2823	3416	4089	4851	5709	6668	7731	1358	1453	1560		1678	1807	1947	2100	2266	-	-	1082	490	708	92	33	64	1	400	2673	120	230/1/50	0,71	3,9	18	12	3/4	1/2
						32	2092	2576	3119	3733	4429	5215	6098	7081	1495	1606	1727		1861	2005	2162	2331	2514																				
						38	1866	2321	2828	3399	4045	4776	5599	6518	1644	1767	1902		2048	2206	2376	2558	2755																				
						43	1648	2085	2566	3105	3714	4403	5179	6050	1792	1925	2070		2226	2395	2575	2769	2977																				
UP-SE6018GK-EAE00	6S1BCS6C4FI	CP: 230V-1ph-50Hz Fan: 230V-1ph-50Hz	10,2	SE6018GK-C	301BC1104AA	25	2742	3365	4071	4871	5776	6795	7933	9193	1592	1706	1833		1974	2129	2298	2481	2680	-	-	1082	490	708	92	33	64	1	400	2545	120	230/1/50	0,91	3,9	18	12	3/4	1/2
						32	2493	3069	3715	4445	5272	6206	7253	8419	1755	1887	2033		2192	2366	2554	2757	2975																				
						38	2223	2765	3368	4047	4814	5682	6658	7749	1933	2080	2240		2415	2604	2808	3027	3263																				
						43	1962	2482	3054	3696	4419	5237	6158	7191	2108	2267	2440		2627	2829	3046	3278	3527																				
UP-SE6018GS-EAE00	6S1BOS6C3FI	CP: 400V-3ph-50Hz Fan: 230V-1ph-50Hz	4,7	SE6018GS-O	301BO1101AA	25	2745	3370	4077	4879	5787	6809	7951	9215	1518	1626	1747		1880	2026	2186	2359	2548	-	-	1082	490	708	92	33	64	1	400	2545	120	230/1/50	0,91	3,9	18	12	3/4	1/2
						32	2499	3075	3723	4456	5286	6222	7273	8444	1672	1797	1935		2086	2250	2428	2620	2827																				
						38	2230	2773	3378	4059	4830	5701	6681	7776	1840	1979	2131		2296	2475	2668	2875	3098																				
						43	1971	2492	3066	3710	4436	5257	6183	7220	2006	2156	2320		2497	2687	2892	3112	3347																				
UP-SE6021GS-EAE00	6S1COS6C3FI	CP: 400V-3ph-50Hz Fan: 230V-1ph-50Hz	4,9	SE6021GS-O	301CO1101AA	25	3097	3794	4579	5465	6463	7579	8820	10189	1688	1814	1956		2113	2287	2478	2687	2915	-	-	1082	490	708	92	33	64	1	400	2545	120	230/1/50	0,91	3,9	18	12	3/4	1/2
						32	2807	3449	4168	4977	5888	6912	8055	9321	1865	2010	2172		2349	2543	2754	2984	3234																				
						38	2494	3100	3770	4522	5368	6321	7387	8573	2055	2217	2394		2588	2799	3027	3275	3542																				
						43	2197	2777	3413	4124	4922	5819	6827	7951	2242	2416	2607		2815	3039	3282	3543	3825																				
UP-SE6026GS-EAE00	6S1GOS6C3FI	CP: 400V-3ph-50Hz Fan: 230V-1ph-50Hz	6,2	SE6026GS-O	301GO1101AA	25	3980	4896	5939	7128	8482	10014	11735	13653	2154	2297	2456		2631	2821	3026	3247	3485	-	-	1277	538	1005	107	36	67	1	500	5195	220	230/1/50	1,34	6	22	16	7/8	5/8
						32	3641	4488	5444	6532	7770	9176	10761	12535	2363	2528	2711		2909	3122	3352	3598	3861																				
						38	3265	4064	4957	5969	7120	8427	9905	11566	2591	2776	2977		3194	3427	3677	3944	4228																				
						43	2901	3667	4516	5471	6556	7789	9185	10757	2818	3018	3234		3467	3716	3982	4266	4567																				
UP-SE6030GS-EAE00	6S1DOS6C3FI	CP: 400V-3ph-50Hz Fan: 230V-1ph-50Hz	6,6	SE6030GS-O	301DO1101AA	25	4483	5506	6665	7981	9473	11154	13034	15119	2360	2524	2707		2908	3129	3370	3631	3914	-	-	1277	538	1005	107	36	67	1	500	5195	220	230/1/50	1,34	6	22	16	7/8	5/8
						32	4087	5032	6094	7297	8662	10203	11935	13865	2594	2784	2993		3221	3469	3737	4026	4337																				
						38	3654	4544	5536	6655	7923	9357	10973	12781	2850	3060	3290		3540	3810	4101	4413	4747																				
						43	3236	4090	5033	6090	7285	8638	10164	11877	3101	3329	3577		3844	4132	4441	4772	5126																				
UP-SE6036GS-EAE00	6S1EOS6C3FI	CP: 400V-3ph-50Hz Fan: 230V-1ph-50Hz	7,6	SE6036GS-O	301EO1101AA	25	5541	6814	8261	9910	11786	13907	16287	18935	2776	2966	3179		3411	3665	3940	4236	4556	-	-	1277	538	1005	107	36	67	1	500	4739	220	230/1/50	2,23	6	22	16	7/8	5/8
						32	5068	6244	7571	9080	10796	12742	14935	17387	3052	3272	3515		3779	4064	4371	4700	5053																				
						38	4544	5653	6894	8298	9893	11703	13749	16045	3354	3599	3866		4155	4467	4800	5157	5537																				
						43	4037	5101	6280	7606	9110	10818	12751	14926	3652	3917	4205		4515	4847	5202	5581	5984																				
UP-SE6043GS-EAE00	6S1FOS6C3FI	CP: 400V-3ph-50Hz Fan: 230V-1ph-50Hz	8,6	SE6043GS-O	301FO1101AA	25	6509	7984	9651	11539	13671	16067	18737	21691	3302	3543	3814		4113	4443	4803	5195	5623	-	-	1277	538	1005	107	36	67	1	500	4739	220	230/1/50	2,23	6	22	16	7/8	5/8
						32	5920	7281	8808	10533	12483	14680	17141	19875	3643	3922	4230		4568	4936	5336	5770	6238																				
						38	5280	6563	7990	9594	11405	13450	15746	18308	4013	4322	4661		5031	5432	5865	6331	6834																				
						43	4667	5897	7252	8768	10477	12405	14575	17004	4376	4711	5076		5471	5898	6358	6851	7382																				

embraco

Note: *Subject to modification without prior notification.*

GENERAL DATA & PERFORMANCE

R404A -MBP - RTG20

CONDENSING UNITS				COMPRESSORS		AMBIENT TEMP.	EN13125 - SUBCOOLING 0K - MIDPOINT COOLING CAPACITY (W)								POWER INPUT (W)								ECO DESIGN		DIMENSIONS (mm)			WEIGHT	ACOUSTICS dB (A)		CONDENSER/FAN						LIQUID RECEIVER	CONNECTION DIAMETERS			
CONDENSING UNITS MODELS	CONDENSING UNIT BOM	VOLTAGE SUPPLY (V)	I NOM (A)	COMPRESSOR MODELS	COMPRESSOR BOM	(°C)	-25°C	-20°C	-15°C	-10°C	-5°C	0°C	+5°C	+10°C	-25°C	-20°C	-15°C		-10°C	-5°C	0°C	+5°C	+10°C	Type	Cop/ Seer	W (width)	D (depth)	H (height)	Net (kg)	Sound Press. @10m	Sound power level	Number of fan	Fan diameter (mm)	Airflow (m^3/h)	Fan power (W)	Voltage supply (V)	Internal volume (dm^3)	dm^3	Suction (mm)	Liquid (mm)	Suction (")	Liquid (")
UP-NEU6212GK-EAE00	667HAS6C2FI	CP: 230V-1ph-50Hz Fan: 230V-1ph-50Hz	3,1	NEU6212GK-A-CSIR	958HA51M1AJ	25	-	664	804	968	1152	1355	1573	1804	-	416	444		474	504	535	567	601	COP	1,74	982	484	600	67	28	59	1	350	1695	67	230/1/50	0,23	1,6	10	6	3/8	1/4
						32	-	585	715	865	1033	1217	1412	1617	-	428	462		496	532	568	606	644																			
						38	-	520	641	779	931	1096	1272	1454	-	440	478		517	557	598	640	683																			
						43	-	-	580	706	845	995	1152	1315	-	-	493		536	579	624	669	715																			
UP-NEU6215GK-EAE00	669NAS6C4FI	CP: 230V-1ph-50Hz Fan: 230V-1ph-50Hz	2,8	NEU6215GK-A-CSR	959NA5190AF	25	-	888	1074	1283	1512	1758	2017	2287	-	499	547		599	654	714	778	849	COP	1,84	982	484	600	67	28	59	1	350	1695	67	230/1/50	0,23	1,6	10	6	3/8	1/4
						32	-	794	962	1152	1359	1581	1816	2059	-	521	572		627	687	752	823	900																			
						38	-	714	867	1039	1227	1429	1642	1861	-	539	593		652	717	788	865	949																			
						43	-	-	786	944	1116	1301	1495	1695	-	-	610		674	743	819	902	994																			
UP-NT6222GK-EAE00	602CAS6C4FI	CP: 230V-1ph-50Hz Fan: 230V-1ph-50Hz	4,3	NT6222GK-A-CSR	922CA0404AF	25	-	1068	1303	1566	1853	2161	2485	2822	-	749	785		835	898	971	1049	1130	COP	1,6	982	484	600	69	29	60	1	350	1695	67	230/1/50	0,23	1,6	12	8	1/2	3/8
						32	-	946	1157	1389	1642	1911	2194	2490	-	764	812		872	941	1016	1095	1172																			
						38	-	-	1026	1233	1456	1693	1943	2203	-	-	840		905	977	1053	1129	1202																			
						43	-	-	-	1103	1301	1512	1733	1964	-	-	-		934	1007	1081	1154	1222																			
UP-NT6224GK-EAE00	622RAS6C4FI	CP: 230V-1ph-50Hz Fan: 230V-1ph-50Hz	4,5	NT6224GK-A-CSR	922RA0404AF	25	-	1284	1599	1950	2334	2743	3174	3620	-	797	857		921	989	1062	1138	1217	COP	1,8	982	484	600	69	29	60	1	350	1523	67	230/1/50	0,45	2,3	12	8	1/2	3/8
						32	-	1151	1426	1736	2076	2441	2825	3226	-	823	891		964	1041	1121	1204	1289																			
						38	-	1034	1278	1556	1861	2189	2537	2899	-	847	923		1003	1086	1173	1262	1353																			
						43	-	-	1154	1406	1684	1984	2302	2634	-	-	952		1037	1126	1217	1311	1407																			
UP-NT6226GK-EAE00	603BAS6C4FI	CP: 230V-1ph-50Hz Fan: 230V-1ph-50Hz	4,8	NT6226GK-A-CSR	923BA0204AF	25	-	1437	1756	2122	2527	2965	3428	3908	-	813	886		964	1046	1134	1228	1328	COP	1,86	982	484	600	69	29	60	1	350	1523	67	230/1/50	0,45	2,3	12	8	1/2	3/8
						32	-	1266	1556	1887	2253	2646	3059	3486	-	853	933		1017	1105	1198	1297	1402																			
						38	-	1129	1394	1694	2024	2377	2747	3128	-	884	972		1062	1156	1256	1360	1471																			
						43	-	-	-	1539	1838	2157	2490	2831	-	-	-		1100	1200	1306	1416	1532																			
UP-NJ9232GK-EAE00	643NAS6C4FI	CP: 230V-1ph-50Hz Fan: 230V-1ph-50Hz	5,7	NJ9232GK-A-CSR	943NA1104AF	25	-	1499	1893	2330	2802	3297	3807	4320	-	1011	1107		1205	1307	1414	1528	1653	COP	1,66	982	484	600	76	30	61	1	350	1523	67	230/1/50	0,45	2,3	16	8	5/8	3/8
						32	-	1283	1640	2036	2460	2903	3356	3809	-	1024	1125		1230	1340	1457	1584	1721																			
						38	-	1101	1423	1780	2161	2557	2959	3359	-	1031	1136		1247	1365	1492	1628	1777																			
						43	-	-	-	1564	1907	2262	2621	2976	-	-	-		1259	1384	1518	1663	1821																			
UP-NJ9232GS-EAE00	647NMS6C3FI	CP: 400V-3ph-50Hz Fan: 230V-1ph-50Hz	2,1	NJ9232GS-M	947NM1101AA	25	-	1580	1954	2403	2910	3459	4033	4614	-	913	1016		1117	1220	1328	1447	1579	COP	1,87	982	484	600	76	30	61	1	350	1523	67	230/1/50	0,45	2,3	16	8	5/8	8
						32	-	1395	1739	2145	2598	3083	3583	4083	-	925	1036		1148	1265	1391	1528	1680																			
						38	-	1235	1552	1920	2324	2752	3187	3617	-	935	1053		1176	1305	1445	1598	1768																			
						43	-	-	-	1727	2090	2469	2850	3221	-	-	-		1199	1339	1491	1658	1842																			
UP-NTU6238GKV-EAE00	605EAS6C4FI	CP: 230V-1ph-50Hz Fan: 230V-1ph-50Hz	5,6	NTU6238GKV-A-CSR	925EA6004AF	25	-	1850	2196	2629	3121	3648	4184	4707	-	954	1030		1107	1188	1272	1363	1460	COP	1,99	982	484	600	76	30	61	1	350	1523	67	230/1/50	0,45	2,3	16	8	5/8	3/8
						32	-	1657	1969	2355	2791	3251	3713	4157	-	-	1096		1183	1274	1370	1473	1582																			
						38	-	-	1770	2114	2499	2901	3299	3675	-	-	1147		1244	1346	1454	1568	1689																			
						43	-	-	-	1908	2249	2602	2946	3264	-	-	-		1293	1405	1523	1648	1779																			
UP-NJ9238GS-EAE00	647RMS6C3FI	CP: 400V-3ph-50Hz Fan: 230V-1ph-50Hz	2,9	NJ9238GS-M	947RM1101AA	25	-	1979	2442	2946	3480	4034	4599	5163	-	1110	1229		1348	1471	1602	1746	1908	COP	1,89	982	484	600	76	30	61	1	350	1523	67	230/1/50	0,45	2,3	16	8	5/8	3/8
						32	-	1744	2157	2606	3080	3571	4068	4563	-	1122	1250		1382	1520	1669	1834	2018																			
						38	-	-	1910	2308	2730	3164	3603	4037	-	-	1269		1411	1563	1728	1910	2113																			
						43	-	-	-	2056	2431	2818	3207		-	-	-		1436	1599	1777	1974	-																			
UP-NJX6250GS-EAE00	645BSS6C3FI	CP: 400V-3ph-50Hz Fan: 230V-1ph-50Hz	3,4	NJX6250GS-M	945BS2101AA	25	-	2633	3202	3831	4511	5233	5987	6765	-	1405	1552		1710	1880	2056	2238	2421	COP	1,88	1082	490	708	88	34	65	1	400	2673	120	230/1/50	0,71	3,9	16	10	5/8	3/8
						32	-	2359	2865	3426	4032	4675	5346	6039	-	1487	1649		1819	1997	2181	2367	2554																			
						38	-	2129	2580	3080	3621	4194	4793	5410	-	1541	1721		1907	2098	2292	2487	2680																			
						43	-	-	-	2788	3273	3787	4324	4878	-	-	-		1978	2183	2389	2594	2795																			
UP-SE6015GK-EAE00	6S1ACS6C4FI	CP: 230V-1ph-50Hz Fan: 230V-1ph-50Hz	8,5	SE6015GK-C	301AC1104AA	25	2436	2946	3525	4175	4898	5693	6555	7481	1437	1533	1638		1752	1872	1998	2129	2264	COP	1,95	1082	490	708	92	33	64	1	400	2673	120	230/1/50	0,71	3,9	18	12	5/8	1/2
						32	2238	2704	3226	3806	4447	5149	5912	6732	1605	1713	1829		1951	2079	2212	2348	2486																			
						38	-	2480	2950	3468	4037	4660	5336	6064	-	1888	2014		2144	2279	2417	2557	2698																			
						43	-	-	2700	3165	3674	4229	4833	5485	-	-	2183		2321	2462	2605	2748	2891																			
UP-SE6015GS-EAE00	6S1AOS6C3FI	CP: 400V-3ph-50Hz Fan: 230V-1ph-50Hz	3,2	SE6015GS-O	301AO1101AA	25	2437	2947	3527	4178	4902	5697	6561	7489	1413	1508	1611		1722	1840	1964	2093	2225	COP	1,99	1082	490	708	92	33	64	1	400	2673	120	230/1/50	0,71	3,9	18	12	3/4	1/2
						32	2240	2706	3228	3809	4451	5155	5919	6741	1578	1684	1798		1918	2043	2173	2307	2442																			
						38	-	2483	2953	3472	4042	4666	5344	6074	-	1856	1979		2107	2239	2375	2512	2650																			
						43	-	-	2704	3170	3680	4237	4842	5496	-	-	2145		2281	2419	2558	2699	2840																			
UP-SE6018GK-EAE00	6S1BCS6C4FI	CP: 230V-1ph-50Hz Fan: 230V-1ph-50Hz	10,2	SE6018GK-C	301BC1104AA	25	2904	3511	4199	4972	5830	6771	7792	8887	1659	1773	1896		2030	2171	2320	2475	2634	COP	2	1082	490	708	92	33	64	1	400	2545	120	230/1/50	0,91	3,9	18	12	3/4	1/2
						32	2668	3223	3843	4532	5292	6124	7026	7995	1855	1983	2119		2263	2413	2569	2730	2893																			
						38	-	2956	3514	4129	4804	5541	6340	7201	-	2187	2335		2488	2647	2809	2974	3140																			
						43	-	-	3215	3767	4370	5028	5741	6512	-	-	2533		2695	2860	3028	3197	3365																			
UP-SE6018GS-EAE00	6S1BOS6C3FI	CP: 400V-3ph-50Hz Fan: 230V-1ph-50Hz	4,7	SE6018GS-O	301BO1101AA	25	2908	3516	4207	4982	5843	6788	7812	8912	1581	1689	1806		1932	2066	2207	2354	2505	COP	2,11	1082	490	708	92	33	64	1	400	2545	120	230/1/50	0,91	3,9	18	12	3/4	1/2
						32	2673	3229	3851	4543	5307	6143	7050	8025	1767	1888	2017		2153	2295	2443	2595	2749																			
						38	-	2964	3524	4142	4821	5562	6367	7234	-	2081	2220		2366	2516	2669	2826	2983																			
						43	-	-	3228	3783	4390	5053	5772	6549	-	-	2407		2561	2717	2876	3036	3195																			
UP-SE6021GK-EAE00	6S1CCS6C4FI	CP: 230V-1ph-50Hz Fan: 230V-1ph-50Hz	11,6	SE6021GK-C	301CC1104AA	25	3271	3947	4708	5557	6492	7508	8602	9765	1862	1996	2142		2299	2467	2644	2828	3017	SEPR	2,94	1082	490	708	92	33	64	1	400	2545	120	230/1/50	0,91	3,9	18	12	3/4	1/2
						32	3001	3617	4300	5053	5878	6772	7734	8758	2084	2234	2394		2564	2742	2927	3117	3311																			
						38	-	3308	3921	4590	5318	6107	6955	7860	-	2465	2638		2819	3006	3198	3393	3590																			
						43	-	-	3576	4174	4821	5521	6274	7080	-	-	2862		3052	3247	3444	3643	3843																			
UP-SE6021GS-EAE00	6S1COS6C3FI	CP: 400V-3ph-50Hz Fan: 230V-1ph-50Hz	4,9	SE6021GS-O	301CO1101AA	25	3277	3954	4718	5570	6509	7531	8630	9801	1766	1892	2030		2178	2336	2503	2677	2855	SEPR	3,11	1082	490	708	92	33	64	1	400	2545	120	230/1/50	0,91	3,9	18	12	3/4	1/2
						32	3008	3626	4312	5069	5898	6799	7767	8799	1975	2116	2267		2427	2595	2769	2949	3131																			
						38	-	3319	3935	4609	5343	6137	6993	7906	-	2333	2497		2667	2843	3024	3208	3394																			
						43	-	-	3593	4196	4849	5556	6317	7132	-	-	2707		2886	3069	3255	3443	3631																			
UP-SE6026GS-EAE00	6S1GOS6C3FI	CP: 400V-3ph-50Hz Fan: 230V-1ph-50Hz	6,2	SE6026GS-O	301GO1101AA	25	4224	5118	6139	7295	8588	10019	11585	13281	2232	2373	2527		2693	2869	3053	3244	3439	SEPR	3,27	1277	538	1005	107	36	67	1	500	5195	220	230/1/50	1,34	6	22	16	7/8	5/8
						32	3889	4709	5632	6668	7821	9094	10488	11998	2486	2646	2816		2995	3181	3374	3572	3773																			
						38	3581	4333	5170	6099	7129	8265	9508	10858	2734	2911	3096		3287	3484	3684	3888	4093																			
						43	-	3990	4752	5592	6518	7538	8656	9872	-	3155	3353		3555	3761	3969	4178	4386																			
UP-SE6030GS-EAE00	6S1DOS6C3FI	CP: 400V-3ph-50Hz Fan: 230V-1ph-50Hz	6,6	SE6030GS-O	301DO1101AA	25	4751	5747	6880	8154	9571	11129	12822	14643	2454	2617	2794		2985	3188	3402	3624	3852	SEPR	3,3	1277	538	1005	107	36	67	1	500	5195	220	230/1/50	1,34	6	22	16	7/8	5/8
						32	4371	5282	6304	7442	8702	10084	11585	13202	2737	2920	3115		3321	3536	3760	3990	4223																			
						38	4017	4853	5776	6795	7916	9144	10479	11920	3011	3214	3425		3645	3872	4104	4341	4579																			
						43	-	-	5297	6215	7221	8320	9516	10810	-	-	3710		3942	4179	4419	4660	4902																			
UP-SE6036GS-EAE00	6S1EOS6C3FI	CP: 400V-3ph-50Hz Fan: 230V-1ph-50Hz	7,6	SE6036GS-O	301EO1101AA	25	5876	7117	8533	10132	11920	13895	16051	18382	2882	3071	3277		3498	3733	3980	4236	4498	SEPR	3,51	1277	538	1005	107	36	67	1	500	4739	220	230/1/50	2,23	6	22	16	7/8	5/8
						32	5411	6548	7828	9261	10854	12611	14529	16605	3218	3431	3658		3896	4146	4404	4669	4938																			
						38	4981	6026	7184	8471	9894	11460	13171	15026	3544	3781	4027		4282	4545	4813	5086	5361																			
						43	-	-	6603	7765	9045	10452	11989	13660	-	-	4365		4635	4910	5188	5467	5746																			
UP-SE6043GS-EAE00	6S1FOS6C3FI	CP: 400V-3ph-50Hz Fan: 230V-1ph-50Hz	8,6	SE6043GS-O	301FO1101AA	25	6889	8323	9948	11767	13781	15983	18365	20912	3447	3688	3952		4236	4538	4856	5187	5528	SEPR	3,37	1277	538	1005	107	36	67	1	500	4739	220	230/1/50	2,23	6	22	16	7/8	5/8
						32	6332	7643	9105	10728	12513	14462	16568	18823	3855	4127	4416		4721	5042	5374	5717	6065																			
						38	-	7012	8330	9778	11364	13091	14959	16963	-	4550	4864		5189	5526	5871	6223	6578																			
						43	-	-	7627	8928	10346	11888	13557	15352	-	-	5274		5617	5968	6324	6682	7042																			

Note: *Subject to modification without prior notification.*

GENERAL DATA & PERFORMANCE

R404A -MBP - SH10K

CONDENSING UNITS				COMPRESSORS		AMBIENT TEMP.	EN13125 - SUBCOOLING 0K - MIDPOINT COOLING CAPACITY (W)								POWER INPUT (W)									ECO DESIGN		DIMENSIONS (mm)			WEIGHT	ACOUSTICS dB (A)		CONDENSER/FAN						LIQUID RECEIVER	CONNECTION DIAMETERS			
CONDENSING UNITS MODELS	CONDENSING UNIT BOM	VOLTAGE SUPPLY (V)	I NOM (A)	COMPRESSOR MODELS	COMPRESSOR BOM	(°C)	-25°C	-20°C	-15°C	-10°C	-5°C	0°C	+5°C	+10°C	-25°C	-20°C	-15°C		-10°C	-5°C	0°C	+5°C	+10°C	Type	Cop/ Seer	W (width)	D (depth)	H (height)	Net (kg)	Sound Press. @10m	Sound power level	Number of fan	Fan diameter (mm)	Airflow (m^3/h)	Fan power (W)	Voltage supply (V)	Internal volume (dm^3)	dm^3	Suction (mm)	Liquid (mm)	Suction (")	Liquid (")
UP-NEU6212GK-EAE00	667HAS6C2FI	CP: 230V-1ph-50Hz Fan: 230V-1ph-50Hz	3,1	NEU6212GK-A-CSIR	958HA51M1AJ	25	-	619	761	928	1119	1330	1561	1807	-	413	441		470	500	532	565	601	-	-	982	484	600	67	28	59	1	350	1695	67	230/1/50	0,23	1,6	10	6	3/8	1/4
						32	-	543	674	826	998	1189	1397	1619	-	422	456		491	526	564	603	644																				
						38	-	475	594	733	890	1064	1252	1453	-	433	471		510	551	593	637	683																				
						43	-	-	528	655	799	958	1130	1314	-	-	485		528	572	618	665	715																				
UP-NEU6215GK-EAE00	669NAS6C4FI	CP: 230V-1ph-50Hz Fan: 230V-1ph-50Hz	2,8	NEU6215GK-A-CSR	959NA5190AF	25	-	829	1018	1232	1468	1725	2000	2291	-	493	541		593	648	709	775	849	-	-	982	484	600	67	28	59	1	350	1695	67	230/1/50	0,23	1,6	10	6	3/8	1/4
						32	-	736	904	1096	1309	1542	1792	2058	-	514	564		619	679	746	819	900																				
						38	-	649	800	974	1168	1382	1613	1859	-	530	584		643	708	780	860	949																				
						43	-	-	713	872	1052	1250	1465	1695	-	-	600		663	733	810	896	993																				
UP-NT6222GK-EAE00	602CAS6C4FI	CP: 230V-1ph-50Hz Fan: 230V-1ph-50Hz	4,3	NT6222GK-A-CSR	922CA0404AF	25	-	1001	1235	1501	1795	2115	2458	2822	-	741	775		825	888	963	1044	1130	-	-	982	484	600	69	29	60	1	350	1695	67	230/1/50	0,23	1,6	12	8	1/2	3/8
						32	-	872	1081	1316	1577	1860	2165	2489	-	753	800		859	929	1007	1089	1171																				
						38	-	-	944	1154	1386	1638	1910	2201	-	-	825		890	963	1042	1122	1201																				
						43	-	-	-	1019	1226	1453	1698	1961	-	-	-		917	991	1069	1147	1221																				
UP-NT6224GK-EAE00	622RAS6C4FI	CP: 230V-1ph-50Hz Fan: 230V-1ph-50Hz	4,5	NT6224GK-A-CSR	922RA0404AF	25	-	1194	1513	1872	2267	2694	3148	3628	-	789	848		912	980	1054	1133	1217	-	-	982	484	600	69	29	60	1	350	1523	67	230/1/50	0,45	2,3	12	8	1/2	3/8
						32	-	1069	1342	1654	2002	2382	2791	3226	-	811	879		951	1029	1111	1198	1290																				
						38	-	942	1182	1459	1773	2118	2493	2894	-	834	909		988	1072	1161	1255	1353																				
						43	-	-	1046	1299	1587	1907	2257	2633	-	-	935		1020	1110	1204	1303	1406																				
UP-NT6226GK-EAE00	603BAS6C4FI	CP: 230V-1ph-50Hz Fan: 230V-1ph-50Hz	4,8	NT6226GK-A-CSR	923BA0204AF	25	-	1342	1665	2038	2454	2910	3398	3913	-	804	876		953	1036	1125	1222	1328	-	-	982	484	600	69	29	60	1	350	1523	67	230/1/50	0,45	2,3	12	8	1/2	3/8
						32	-	1174	1462	1796	2169	2579	3019	3484	-	840	919		1002	1091	1187	1290	1403																				
						38	-	1026	1286	1587	1926	2298	2699	3124	-	870	955		1045	1141	1243	1352	1471																				
						43	-	-	1145	1421	1731	2073	2442	2833	-	-	-		1081	1183	1291	1406	1530																				
UP-NJ9232GK-EAE00	643NAS6C4FI	CP: 230V-1ph-50Hz Fan: 230V-1ph-50Hz	5,7	NJ9232GK-A-CSR	943NA1104AF	25	-	1405	1797	2238	2719	3232	3769	4323	-	1001	1095		1192	1293	1402	1521	1653	-	-	982	484	600	76	30	61	1	350	1523	67	230/1/50	0,45	2,3	16	8	5/8	3/8
						32	-	1190	1540	1935	2367	2828	3310	3806	-	1010	1110		1214	1325	1445	1576	1722																				
						38	-	1002	1315	1669	2058	2474	2909	3356	-	1015	1120		1230	1349	1478	1620	1776																				
						43	-	-	-	1449	1801	2178	2573	2979	-	-	-		1241	1366	1502	1652	1818																				
UP-NJ9232GS-EAE00	647NMS6C3FI	CP: 400V-3ph-50Hz Fan: 230V-1ph-50Hz	2,1	NJ9232GS-M	947NM1101AA	25	-	1478	1853	2306	2822	3390	3992	4616	-	904	1005		1105	1207	1317	1439	1579	-	-	982	484	600	76	30	61	1	350	1523	67	230/1/50	0,45	2,3	16	8	5/8	8
						32	-	1292	1631	2036	2497	3000	3532	4080	-	912	1022		1133	1250	1377	1519	1681																				
						38	-	1123	1431	1796	2210	2659	3132	3616	-	920	1037		1159	1288	1430	1588	1767																				
						43	-	-	-	1595	1970	2374	2798	3229	-	-	-		1180	1319	1473	1645	1839																				
UP-NTU6238GKV-EAE00	605EAS6C4FI	CP: 230V-1ph-50Hz Fan: 230V-1ph-50Hz	5,6	NTU6238GKV-A-CSR	925EA6004AF	25	-	1731	2082	2521	3026	3573	4141	4711	-	941	1015		1091	1172	1259	1355	1461	-	-	982	484	600	76	30	61	1	350	1523	67	230/1/50	0,45	2,3	16	8	5/8	3/8
						32	-	1530	1842	2233	2680	3163	3661	4156	-	992	1077		1164	1256	1355	1464	1583																				
						38	-	-	1627	1976	2375	2803	3242	3675	-	-	1126		1223	1326	1437	1557	1688																				
						43	-	-	-	1761	2119	2502	2892	3273	-	-	-		1269	1382	1502	1633	1774																				
UP-NJ9238GS-EAE00	647RMS6C3FI	CP: 400V-3ph-50Hz Fan: 230V-1ph-50Hz	2,9	NJ9238GS-M	947RM1101AA	25	-	1853	2316	2824	3370	3946	4546	5161	-	1096	1214		1331	1454	1587	1736	1908	-	-	982	484	600	76	30	61	1	350	1523	67	230/1/50	0,45	2,3	16	8	5/8	3/8
						32	-	1611	2017	2467	2953	3469	4006	4557	-	1105	1232		1362	1501	1652	1823	2017																				
						38	-	-	1755	2155	2591	3055	3541	4039	-	-	1248		1389	1541	1708	1896	2110																				
						43	-	-	-	1897	2291	2713	3155	-	-	-	-		1411	1574	1754	1956	2187																				
UP-NJX6250GS-EAE00	645BSS6C3FI	CP: 400V-3ph-50Hz Fan: 230V-1ph-50Hz	3,4	NJX6250GS-M	945BS2101AA	25	-	2473	3042	3678	4375	5127	5928	6770	-	1385	1530		1689	1859	2039	2228	2422	-	-	1082	490	708	88	34	65	1	400	2673	120	230/1/50	0,71	3,9	16	10	5/8	3/8
						32	-	2178	2682	3250	3875	4553	5276	6039	-	1464	1623		1793	1972	2160	2354	2554																				
						38	-	1931	2378	2886	3448	4059	4713	5406	-	1515	1691		1876	2068	2267	2471	2679																				
						43	-	-	-	2580	3087	3642	4238	4871	-	-	-		1942	2148	2360	2575	2793																				
UP-SE6015GK-EAE00	6S1ACS6C4FI	CP: 230V-1ph-50Hz Fan: 230V-1ph-50Hz	8,5	SE6015GK-C	301AC1104AA	25	2235	2751	3338	4003	4749	5578	6491	7485	1412	1507	1611		1724	1846	1977	2117	2265	-	-	1082	490	708	92	33	64	1	400	2673	120	230/1/50	0,71	3,9	18	12	5/8	1/2
						32	2035	2495	3016	3605	4268	5008	5827	6724	1571	1677	1792		1914	2045	2184	2331	2486																				
						38	1824	2239	2707	3235	3831	4498	5240	6057	1726	1842	1966		2098	2236	2382	2536	2697																				
						43	1629	2009	2434	2914	3455	4063	4743	5495	1867	1993	2126		2265	2410	2563	2722	2887																				
UP-SE6015GS-EAE00	6S1AOS6C3FI	CP: 400V-3ph-50Hz Fan: 230V-1ph-50Hz	3,2	SE6015GS-O	301AO1101AA	25	2236	2752	3340	4006	4753	5583	6497	7493	1389	1482	1584		1695	1815	1944	2081	2226	-	-	1082	490	708	92	33	64	1	400	2673	120	230/1/50	0,71	3,9	18	12	3/4	1/2
						32	2036	2497	3019	3609	4273	5014	5834	6733	1545	1649	1761		1882	2010	2146	2291	2443																				
						38	1826	2242	2710	3240	3836	4505	5248	6066	1697	1811	1933		2061	2197	2341	2491	2649																				
						43	1632	2012	2438	2919	3461	4071	4751	5505	1835	1959	2089		2225	2368	2517	2674	2836																				
UP-SE6018GK-EAE00	6S1BCS6C4FI	CP: 230V-1ph-50Hz Fan: 230V-1ph-50Hz	10,2	SE6018GK-C	301BC1104AA	25	2665	3278	3977	4766	5652	6634	7715	8891	1630	1742	1864		1997	2141	2296	2460	2635	-	-	1082	490	708	92	33	64	1	400	2545	120	230/1/50	0,91	3,9	18	12	3/4	1/2
						32	2425	2972	3592	4292	5078	5955	6924	7985	1816	1940	2075		2219	2373	2537	2710	2893																				
						38	2173	2667	3223	3851	4557	5348	6226	7192	1996	2133	2279		2433	2596	2768	2949	3139																				
						43	1941	2393	2898	3468	4110	4831	5635	6524	2161	2309	2465		2628	2799	2978	3166	3361																				
UP-SE6018GS-EAE00	6S1BOS6C3FI	CP: 400V-3ph-50Hz Fan: 230V-1ph-50Hz	4,7	SE6018GS-O	301BO1101AA	25	2668	3284	3984	4776	5665	6651	7736	8917	1554	1659	1775		1901	2038	2184	2340	2506	-	-	1082	490	708	92	33	64	1	400	2545	120	230/1/50	0,91	3,9	18	12	3/4	1/2
						32	2430	2979	3601	4304	5094	5975	6948	8015	1729	1847	1975		2111	2257	2412	2577	2749																				
						38	2180	2676	3234	3865	4575	5370	6253	7225	1900	2030	2168		2314	2468	2631	2802	2982																				
						43	1949	2403	2911	3483	4129	4855	5664	6560	2056	2196	2343		2498	2660	2829	3007	3191																				
UP-SE6021GK-EAE00	6S1CCS6C4FI	CP: 230V-1ph-50Hz Fan: 230V-1ph-50Hz	11,6	SE6021GK-C	301CC1104AA	25	3004	3685	4456	5321	6285	7348	8508	9763	1827	1957	2101		2259	2429	2613	2809	3018	-	-	1082	490	708	92	33	64	1	400	2545	120	230/1/50	0,91	3,9	18	12	3/4	1/2
						32	2722	3328	4009	4775	5629	6575	7615	8745	2036	2182	2340		2510	2692	2886	3092	3311																				
						38	2431	2977	3587	4271	5037	5889	6829	7858	2239	2399	2570		2751	2943	3147	3362	3587																				
						43	2165	2663	3217	3837	4532	5307	6167	7113	2424	2597	2779		2970	3171	3383	3605	3837																				
UP-SE6021GS-EAE00	6S1COS6C3FI	CP: 400V-3ph-50Hz Fan: 230V-1ph-50Hz	4,9	SE6021GS-O	301CO1101AA	25	3009	3693	4466	5335	6303	7371	8537	9799	1733	1856	1992		2140	2301	2474	2659	2856	-	-	1082	490	708	92	33	64	1	400	2545	120	230/1/50	0,91	3,9	18	12	3/4	1/2
						32	2730	3338	4023	4792	5651	6603	7648	8786	1930	2068	2216		2376	2548	2731	2925	3131																				
						38	2441	2989	3603	4291	5062	5920	6866	7903	2121	2272	2433		2603	2784	2976	3178	3391																				
						43	2176	2677	3234	3859	4559	5340	6207	7161	2296	2458	2629		2809	2999	3198	3407	3625																				
UP-SE6026GS-EAE00	6S1GOS6C3FI	CP: 400V-3ph-50Hz Fan: 230V-1ph-50Hz	6,2	SE6026GS-O	301GO1101AA	25	3870	4776	5815	6998	8334	9828	11482	13296	2198	2337	2490		2656	2834	3025	3227	3440	-	-	1277	538	1005	107	36	67	1	500	5195	220	230/1/50	1,34	6	22	16	7/8	5/8
						32	3543	4354	5279	6332	7524	8861	10349	11990	2439	2595	2763		2943	3134	3337	3550	3774																				
						38	3191	3926	4760	5707	6780	7990	9342	10841	2674	2847	3029		3222	3424	3637	3860	4093																				
						43	2863	3538	4297	5160	6139	7245	8487	9870	2890	3077	3272		3476	3689	3911	4142	4382																				
UP-SE6030GS-EAE00	6S1DOS6C3FI	CP: 400V-3ph-50Hz Fan: 230V-1ph-50Hz	6,6	SE6030GS-O	301DO1101AA	25	4358	5367	6517	7819	9282	10909	12700	14653	2413	2573	2749		2940	3146	3367	3603	3853	-	-	1277	538	1005	107	36	67	1	500	5195	220	230/1/50	1,34	6	22	16	7/8	5/8
						32	3976	4877	5899	7056	8359	9813	11422	13187	2681	2860	3052		3259	3480	3715	3963	4224																				
						38	3572	4387	5306	6346	7518	8831	10292	11903	2941	3137	3346		3567	3801	4047	4306	4577																				
						43	3199	3945	4782	5727	6795	7995	9336	10821	3179	3391	3614		3848	4093	4349	4617	4896																				
UP-SE6036GS-EAE00	6S1EOS6C3FI	CP: 400V-3ph-50Hz Fan: 230V-1ph-50Hz	7,6	SE6036GS-O	301EO1101AA	25	5385	6643	8083	9720	11566	13627	15906	18401	2836	3022	3226		3448	3686	3942	4213	4500	-	-	1277	538	1005	107	36	67	1	500	4739	220	230/1/50	2,23	6	22	16	7/8	5/8
						32	4928	6054	7336	8793	10439	12285	14335	16592	3154	3363	3587		3827	4082	4353	4639	4940																				
						38	4438	5458	6613	7924	9407	11077	12940	15002	3465	3694	3937		4194	4465	4750	5048	5360																				
						43	3982	4918	5971	7165	8518	10045	11757	13660	3749	3997	4257		4529	4813	5110	5419	5741																				
UP-SE6043GS-EAE00	6S1FOS6C3FI	CP: 400V-3ph-50Hz Fan: 230V-1ph-50Hz	8,6	SE6043GS-O	301FO1101AA	25	6323	7774	9421	11278	13356	15656	18179	20918	3385	3622	3882		4165	4473	4803	5155	5530	-	-	1277	538	1005	107	36	67	1	500	4739	220	230/1/50	2,23	6	22	16	7/8	5/8
						32	5755	7048	8510	10157	12005	14059	16324	18798	3771	4035	4320		4627	4955	5304	5675	6066																				
						38	5160	6328	7641	9119	10780	12635	14689	16945	4146	4435	4743		5071	5417	5783	6169	6574																				
						43	4613	5682	6876	8219	9731	11424	13308	15388	4488	4800	5129		5474	5837	6218	6616	7032																				

Note: *Subject to modification without prior notification.*

GENERAL DATA & PERFORMANCE

R134a -MBP - RTG20

CONDENSING UNITS				COMPRESSORS		AMBIENT TEMP.	EN13125 - SUBCOOLING 0K - MIDPOINT COOLING CAPACITY (W)							POWER INPUT (W)								ECO DESIGN		DIMENSIONS (MM)			WEIGHT	ACOUSTICS dB (A)		CONDENSER/FAN						LIQUID RECEIVER	CONNECTION DIAMETERS			
CONDENSING UNITS MODELS	CONDENSING UNIT BOM	VOLTAGE SUPPLY (V)	I NOM (A)	COMPRESSOR MODELS	COMPRESSOR BOM	(°C)	-20°C	-15°C	-10°C	-5°C	0°C	+5°C	+10°C	-20°C	-15°C	-10°C	-5°C		0°C	+5°C	+10°C	Type	Cop/ Seer	W (width)	D (depth)	H (height)	Net (kg)	Sound Press. @10m	Sound power level	Number of fan	Fan diameter (mm)	Airflow (m^3/h)	Fan power (W)	Voltage supply (V)	Internal volume (dm^3)	dm^3	Suction (mm)	Liquid (mm)	Suction (")	Liquid (")
UP-NEU6214Z-EA00	668NAS6C4FI	CP: 230V-1ph-50Hz Fan: 230V-1ph-50Hz	2,9	**NEU6214Z-A-CSR**	269NA5190AF	25	-	770	957	1181	1440	1728	2040	-	439	478	524		578	639	706	COP	1,79	982	484	600	67	28	59	1	350	1695	67	230/1/50	0,23	1,6	10	6	3/8	1/4
						32	-	716	893	1102	1342	1608	1895	-	457	499	549		605	668	738																			
						38	-	667	833	1029	1252	1497	1762	-	471	517	570		630	696	768																			
						43	-	-	779	963	1171	1400	1645	-	-	531	588		651	720	796																			
UP-NJ6220ZZ-EA00	644HAS6C4FI	CP: 230V-1ph-50Hz Fan: 230V-1ph-50Hz	6,2	**NJ6220Z-A-CSIR**	144CA1104AF	25	-	1062	1337	1635	1963	2324	2723	-	673	735	795		861	939	1037	COP	1,6	982	484	600	69	29	60	1	350	1695	67	230/1/51	0,23	1,6	12	6	1/2	1/4
						32	-	925	1182	1457	1760	2093	2462	-	666	741	814		892	982	1093																			
						38	-	-	1053	1310	1590	1899	2240	-	-	745	829		918	1020	1142																			
						43	-	-	950	1190	1451	1739	2058	-	-	749	842		940	1051	1182																			
UP-NJ6226Z-EA00	642HAS6C4FI	CP: 230V-1ph-50Hz Fan: 230V-1ph-50Hz	5,6	**NJ6226Z-A-CSR**	142HA1404AF	25	-	1402	1718	2059	2425	2817	3235	-	768	860	957		1062	1182	1322	COP	1,72	982	484	600	69	29	60	1	350	1695	67	230/1/52	0,23	1,6	12	6	1/2	1/4
						32	-	1223	1519	1836	2175	2538	2924	-	784	885	990		1104	1232	1381																			
						38	-	-	1353	1649	1965	2302	2660	-	-	898	1012		1134	1272	1429																			
						43	-	-	-	1497	1794	-	-	-	-	-	1024		1156	-	-																			
UP-NJ6226ZX-EA00	546EMS6C3FI	CP: 400V-3ph-50Hz Fan: 230V-1ph-50Hz	2,2	**NJ6226ZX-M**	148IM1101AA	25	-	1626	1892	2212	2572	2959	3355	-	734	813	903		1004	1117	1242	COP	1,98	982	484	600	69	29	60	1	350	1695	67	230/1/53	0,23	1,6	12	6	1/2	1/4
						32	-	1386	1647	1951	2286	2638	2991	-	738	831	935		1049	1174	1310																			
						38	-	-	1435	1726	2038	2360	2677	-	-	847	963		1089	1224	1369																			
						43	-	-	-	1536	1830	-	-	-	-	-	986		1122	-	-																			
UP-SE6015GK-EAE00	6S1ACS6C4FI	CP: 230V-1ph-50Hz Fan: 230V-1ph-50Hz	5,3	**SE6015GK-C**	301AC1104AA	25	1564	1941	2413	2972	3612	4325	5102	941	990	1050	1116		1186	1259	1331	COP	1,97	1082	490	708	92	33	64	1	400	2673	120	230/1/50	0,71	3,9	18	12	3/4	1/2
						32	1437	1796	2245	2777	3385	4060	4795	1015	1073	1142	1218		1298	1381	1464																			
						38	1331	1668	2092	2595	3171	3809	4504	1084	1150	1226	1310		1400	1491	1583																			
						43	1248	1563	1962	2438	2982	3588	4246	1149	1220	1303	1394		1490	1589	1688																			
UP-SE6015GS-EAE00	6S1AOS6C3FI	CP: 400V-3ph-50Hz Fan: 230V-1ph-50Hz	2,3	**SE6015GS-O**	301AO1101AA	25	1564	1942	2413	2973	3613	4326	5104	926	975	1033	1098		1167	1239	1309	COP	2,00	1082	490	708	92	33	64	1	400	2673	120	230/1/50	0,71	3,9	18	12	3/4	1/2
						32	1438	1797	2246	2778	3386	4062	4797	999	1056	1124	1198		1277	1359	1440																			
						38	1331	1669	2093	2597	3172	3811	4506	1067	1132	1207	1289		1377	1467	1557																			
						43	1249	1564	1963	2439	2984	3590	4249	1130	1201	1282	1371		1466	1563	1660																			
UP-SE6018GK-EAE00	6S1BCS6C4FI	CP: 230V-1ph-50Hz Fan: 230V-1ph-50Hz	6,2	**SE6018GK-C**	301BC1104AA	25	1865	2315	2877	3543	4305	5153	6077	1079	1137	1206	1284		1368	1454	1539	COP	2,04	1082	490	708	92	33	64	1	400	2545	120	230/1/50	0,91	3,9	18	12	3/4	1/2
						32	1714	2142	2677	3310	4033	4836	5709	1165	1234	1314	1403		1498	1596	1694																			
						38	1587	1989	2494	3093	3777	4537	5362	1246	1323	1413	1511		1616	1724	1833																			
						43	1488	1863	2339	2905	3553	4273	5054	1321	1405	1502	1609		1722	1839	1956																			
UP-SE6018GS-EAE00	6S1BOS6C3FI	CP: 400V-3ph-50Hz Fan: 230V-1ph-50Hz	3,7	**SE6018GS-O**	301BO1101AA	25	1867	2317	2879	3546	4309	5158	6083	1031	1086	1152	1226		1305	1386	1467	COP	2,14	1082	490	708	92	33	64	1	400	2545	120	230/1/50	0,91	3,9	18	12	3/4	1/2
						32	1716	2144	2680	3314	4038	4842	5717	1113	1178	1254	1339		1429	1522	1614																			
						38	1589	1991	2497	3098	3783	4544	5371	1190	1263	1348	1441		1541	1643	1746																			
						43	1490	1866	2342	2910	3559	4281	5064	1261	1341	1433	1534		1641	1752	1862																			
UP-SE6021GK-EAE00	6S1CCS6C4FI	CP: 230V-1ph-50Hz Fan: 230V-1ph-50Hz	6,9	**SE6021GK-C**	301CC1104AA	25	2108	2615	3247	3995	4848	5794	6820	1196	1264	1345	1437		1536	1639	1743	COP	2,06	1082	490	708	92	33	64	1	400	2545	120	230/1/50	0,91	3,9	18	12	3/4	1/2
						32	1936	2417	3018	3727	4534	5426	6393	1292	1372	1465	1569		1681	1798	1915																			
						38	1793	2244	2809	3479	4240	5082	5993	1383	1472	1576	1691		1814	1942	2071																			
						43	1682	2102	2634	3265	3984	4780	5641	1468	1565	1677	1801		1933	2071	2209																			
UP-SE6021GS-EAE00	6S1COS6C3FI	CP: 400V-3ph-50Hz Fan: 230V-1ph-50Hz	3,8	**SE6021GS-O**	301CO1101AA	25	2111	2618	3251	4000	4854	5801	6829	1138	1202	1279	1365		1459	1556	1654	COP	2,17	1082	490	708	92	33	64	1	400	2545	120	230/1/50	0,91	3,9	18	12	3/4	1/2
						32	1939	2421	3022	3732	4541	5435	6404	1229	1304	1392	1491		1596	1706	1817																			
						38	1796	2247	2814	3485	4248	5092	6005	1315	1399	1497	1605		1721	1842	1964																			
						43	1685	2106	2639	3272	3993	4792	5655	1395	1486	1592	1709		1834	1963	2094																			
UP-SE6026GS-EAE00	6S1GOS6C3FI	CP: 400V-3ph-50Hz Fan: 230V-1ph-50Hz	5	**SE6026GS-O**	301GO1101AA	25	2705	3358	4177	5150	6267	7515	8882	1483	1557	1643	1740		1841	1945	2045	COP	2,18	1277	538	1005	107	36	67	1	500	5195	220	230/1/50	1,34	6	22	16	7/8	5/8
						32	2488	3112	3895	4824	5888	7076	8373	1598	1685	1786	1897		2014	2134	2250																			
						38	2304	2893	3634	4516	5527	6654	7886	1704	1802	1916	2040		2170	2303	2433																			
						43	2161	2711	3411	4247	5208	6280	7450	1803	1910	2033	2167		2308	2452	2594																			
UP-SE6030GS-EAE00	6S1DOS6C3FI	CP: 400V-3ph-50Hz Fan: 230V-1ph-50Hz	5,4	**SE6030GS-O**	301DO1101AA	25	3051	3787	4707	5800	7050	8445	9967	1614	1697	1796	1907		2025	2146	2265	COP	2,25	1277	538	1005	107	36	67	1	500	5195	220	230/1/50	1,34	6	22	16	7/8	5/8
						32	2805	3507	4385	5425	6615	7937	9378	1739	1838	1953	2080		2215	2353	2490																			
						38	2598	3258	4088	5075	6202	7455	8820	1857	1967	2096	2236		2386	2539	2691																			
						43	2437	3054	3837	4770	5839	7029	8324	1965	2086	2225	2377		2539	2704	2869																			
UP-SE6036GS-EAE00	6S1EOS6C3FI	CP: 400V-3ph-50Hz Fan: 230V-1ph-50Hz	5,7	**SE6036GS-O**	301EO1101AA	25	3756	4662	5796	7143	8686	10408	12289	1894	1993	2111	2242		2381	2524	2664	SEPR	3,21	1277	538	1005	107	36	67	1	500	4739	220	230/1/50	2,23	6	22	16	7/8	5/8
						32	3454	4319	5401	6686	8154	9789	11572	2045	2162	2299	2450		2609	2773	2934																			
						38	3199	4014	5038	6256	7649	9200	10889	2186	2318	2470	2638		2815	2996	3176																			
						43	3001	3762	4729	5882	7204	8677	10282	2316	2460	2626	2807		2998	3194	3389																			
UP-SE6043GS-EAE00	6S1FOS6C3FI	CP: 400V-3ph-50Hz Fan: 230V-1ph-50Hz	6,4	**SE6043GS-O**	301FO1101AA	25	4421	5485	6813	8386	10181	12175	14344	2230	2354	2503	2671		2851	3038	3225	SEPR	3,18	1277	538	1005	107	36	67	1	500	4739	220	230/1/50	2,23	6	22	16	7/8	5/8
						32	4063	5075	6338	7832	9534	11420	13467	2410	2556	2727	2918		3123	3334	3547																			
						38	3763	4713	5905	7318	8927	10710	12643	2579	2743	2933	3144		3369	3602	3836																			
						43	3531	4417	5539	6874	8397	10086	11916	2736	2915	3121	3348		3590	3840	4093																			

Note: *Subject to modification without prior notification.*

GENERAL DATA & PERFORMANCE

R134a -MBP - SH10K

CONDENSING UNITS				COMPRESSORS		AMBIENT TEMP.	EN13125 - SUBCOOLING OK - MIDPOINT COOLING CAPACITY (W)							POWER INPUT (W)								ECO DESIGN		DIMENSIONS (MM)			WEIGHT	ACOUSTICS dB (A)		CONDENSER/FAN						LIQUID RECEIVER	CONNECTION DIAMETERS			
CONDENSING UNITS MODELS	CONDENSING UNIT BOM	VOLTAGE SUPPLY (V)	I NOM (A)	COMPRESSOR MODELS	COMPRESSOR BOM	(°C)	-20°C	-15°C	-10°C	-5°C	0°C	+5°C	+10°C	-20°C	-15°C	-10°C	-5°C		0°C	+5°C	+10°C	Type	Cop/ Seer	W (width)	D (depth)	H (height)	Net (kg)	Sound Press. @10m	Sound power level	Number of fan	Fan diameter (mm)	Airflow (m³/h)	Fan power (W)	Voltage supply (V)	Internal volume (dm³)	dm³	Suction (mm)	Liquid (mm)	Suction (")	Liquid (")
UP-NEU6214Z-EA00	668NAS6C4FI	CP: 230V-1ph-50Hz Fan: 230V-1ph-50Hz	2,9	**NEU6214Z-A-CSR**	269NA5190AF	25	-	753	940	1166	1427	1721	2042	-	437	476	523		577	638	706	-	-	982	484	600	67	28	59	1	350	1695	67	230/1/50	0,23	1,6	10	6	3/8	1/4
						32	-	696	872	1083	1327	1598	1895	-	455	497	547		603	667	738																			
						38	-	642	808	1006	1233	1486	1762	-	468		567		627	694	768																			
						43	-	-	752	938	1151	1388	1645	-	-	528	585		648	718	796																			
UP-NJ6220ZZ-EA00	644HAS6C4FI	CP: 230V-1ph-50Hz Fan: 230V-1ph-50Hz	6,2	**NJ6220Z-A-CSIR**	144CA1104AF	25	-	1036	1313	1614	1946	2315	2723	-	671	732	792		858	936	1037	-	-	982	484	600	69	29	60	1	350	1695	67	230/1/51	0,23	1,6	12	6	1/2	1/4
						32	-	900	1155	1432	1738	2079	2459	-	663	737	810		888	980	1093																			
						38	-	-	1021	1278	1563	1882	2240	-	-	741	825		914	1017	1141																			
						43	-	-	914	1157	1425	1727	2066	-	-	745	837		936	1047	1180																			
UP-NJ6226Z-EA00	642HAS6C4FI	CP: 230V-1ph-50Hz Fan: 230V-1ph-50Hz	5,6	**NJ6226Z-A-CSR**	142HA1404AF	25	-	1369	1687	2030	2401	2802	3233	-	764	855	951		1057	1179	1323	-	-	982	484	600	69	29	60	1	350	1695	67	230/1/52	0,23	1,6	12	6	1/2	1/4
						32	-	1187	1481	1799	2143	2517	2922	-	779	880	985		1100	1230	1381																			
						38	-	-	1308	1607	1932	2285	2669	-	-	893	1007		1129	1267	1424																			
						43	-	-	-	1457	1766	-	-	-	-	-	1018		1147	-	-																			
UP-NJ6226ZX-EA00	546EMS6C3FI	CP: 400V-3ph-50Hz Fan: 230V-1ph-50Hz	2,2	**NJ6226ZX-M**	148IM1101AA	25	-	1588	1856	2180	2547	2943	3354	-	731	809	898		1000	1115	1243	-	-	982	484	600	69	29	60	1	350	1695	67	230/1/53	0,23	1,6	12	6	1/2	1/4
						32	-	1345	1606	1913	2255	2618	2991	-	734	826	930		1044	1171	1310																			
						38	-	-	1390	1684	2005	2343	2684	-	-	842	957		1083	1220	1367																			
						43	-	-	-	1497	1802	-	-	-	-	-	979		1114	-	-																			
UP-SE6015GK-EAE00	6S1ACS6C4FI	CP: 230V-1ph-50Hz Fan: 230V-1ph-50Hz	5,3	**SE6015GK-C**	301AC1104AA	25	1526	1903	2374	2935	3582	4307	5106	945	992	1049	1113		1183	1256	1330	-	-	1082	490	708	92	33	64	1	400	2673	120	230/1/50	0,71	3,9	18	12	3/4	1/2
						32	1386	1744	2193	2729	3345	4037	4797	1009	1066	1134	1210		1292	1377	1464																			
						38	1271	1607	2031	2539	3125	3782	4504	1077	1142	1218	1303		1394	1489	1585																			
						43	1183	1495	1894	2375	2932	3557	4245	1141	1212	1295	1386		1484	1585	1688																			
UP-SE6015GS-EAE00	6S1AOS6C3FI	CP: 400V-3ph-50Hz Fan: 230V-1ph-50Hz	2,3	**SE6015GS-O**	301AO1101AA	25	1527	1903	2375	2936	3583	4309	5108	930	977	1033	1096		1164	1236	1309	-	-	1082	490	708	92	33	64	1	400	2673	120	230/1/50	0,71	3,9	18	12	3/4	1/2
						32	1387	1745	2194	2730	3347	4039	4799	993	1050	1116	1191		1271	1355	1440																			
						38	1272	1608	2032	2541	3127	3784	4507	1060	1124	1199	1282		1371	1464	1558																			
						43	1183	1496	1896	2377	2934	3559	4248	1123	1193	1274	1363		1459	1559	1660																			
UP-SE6018GK-EAE00	6S1BCS6C4FI	CP: 230V-1ph-50Hz Fan: 230V-1ph-50Hz	6,2	**SE6018GK-C**	301BC1104AA	25	1820	2269	2830	3499	4268	5132	6082	1083	1139	1206	1281		1364	1450	1538	-	-	1082	490	708	92	33	64	1	400	2545	120	230/1/50	0,91	3,9	18	12	3/4	1/2
						32	1653	2079	2614	3252	3986	4808	5712	1158	1225	1305	1394		1491	1592	1694																			
						38	1516	1916	2421	3026	3723	4504	5363	1237	1314	1403	1503		1610	1721	1835																			
						43	1410	1782	2258	2831	3492	4235	5052	1313	1396	1492	1600		1714	1834	1955																			
UP-SE6018GS-EAE00	6S1BOS6C3FI	CP: 400V-3ph-50Hz Fan: 230V-1ph-50Hz	3,7	**SE6018GS-O**	301BO1101AA	25	1822	2271	2833	3502	4272	5137	6088	1036	1088	1152	1223		1301	1383	1466	-	-	1082	490	708	92	33	64	1	400	2545	120	230/1/50	0,91	3,9	18	12	3/4	1/2
						32	1655	2082	2618	3256	3991	4815	5719	1106	1170	1246	1331		1422	1517	1614																			
						38	1518	1919	2425	3031	3729	4512	5372	1181	1254	1339	1433		1535	1640	1748																			
						43	1412	1785	2262	2836	3499	4243	5062	1253	1332	1423	1525		1634	1747	1862																			
UP-SE6021GK-EAE00	6S1CCS6C4FI	CP: 230V-1ph-50Hz Fan: 230V-1ph-50Hz	6,9	**SE6021GK-C**	301CC1104AA	25	2055	2561	3192	3943	4804	5768	6825	1199	1264	1342	1432		1530	1634	1741	-	-	1082	490	708	92	33	64	1	400	2545	120	230/1/50	0,91	3,9	18	12	3/4	1/2
						32	1866	2345	2946	3660	4479	5394	6395	1284	1362	1455	1559		1673	1793	1916																			
						38	1712	2160	2726	3402	4177	5044	5993	1373	1461	1565	1681		1806	1938	2073																			
						43	1593	2009	2541	3179	3914	4737	5638	1458	1554	1665	1789		1923	2063	2206																			
UP-SE6021GS-EAE00	6S1COS6C3FI	CP: 400V-3ph-50Hz Fan: 230V-1ph-50Hz	3,8	**SE6021GS-O**	301CO1101AA	25	2058	2564	3196	3947	4810	5775	6834	1141	1202	1276	1361		1453	1551	1653	-	-	1082	490	708	92	33	64	1	400	2545	120	230/1/50	0,91	3,9	18	12	3/4	1/2
						32	1869	2349	2950	3665	4486	5402	6406	1221	1295	1382	1481		1588	1701	1818																			
						38	1715	2164	2731	3408	4186	5055	6005	1306	1389	1486	1596		1714	1838	1965																			
						43	1596	2013	2546	3186	3923	4748	5652	1386	1476	1581	1698		1825	1957	2092																			
UP-SE6026GS-EAE00	6S1GOS6C3FI	CP: 400V-3ph-50Hz Fan: 230V-1ph-50Hz	5	**SE6026GS-O**	301GO1101AA	25	2644	3296	4115	5092	6219	7489	8892	1493	1563	1647	1740		1839	1942	2045	-	-	1277	538	1005	107	36	67	1	500	5195	220	230/1/50	1,34	6	22	16	7/8	5/8
						32	2402	3025	3808	4743	5823	7037	8378	1590	1675	1775	1887		2005	2127	2250																			
						38	2204	2790	3532	4422	5451	6609	7888	1693	1790	1903	2028		2161	2298	2436																			
						43	2050	2596	3297	4142	5122	6228	7450	1792	1898	2021	2156		2299	2448	2596																			
UP-SE6030GS-EAE00	6S1DOS6C3FI	CP: 400V-3ph-50Hz Fan: 230V-1ph-50Hz	5,4	**SE6030GS-O**	301DO1101AA	25	2980	3714	4634	5730	6993	8412	9976	1622	1702	1797	1904		2020	2142	2264	-	-	1277	538	1005	107	36	67	1	500	5195	220	230/1/50	1,34	6	22	16	7/8	5/8
						32	2707	3406	4285	5332	6539	7893	9383	1730	1826	1940	2067		2204	2346	2490																			
						38	2484	3141	3972	4967	6114	7403	8821	1844	1954	2082	2224		2376	2534	2694																			
						43	2311	2923	3706	4650	5741	6969	8322	1953	2073	2211	2364		2528	2698	2870																			
UP-SE6036GS-EAE00	6S1EOS6C3FI	CP: 400V-3ph-50Hz Fan: 230V-1ph-50Hz	5,7	**SE6036GS-O**	301EO1101AA	25	3669	4574	5707	7059	8617	10369	12302	1905	2000	2113	2240		2377	2519	2663	-	-	1277	538	1005	107	36	67	1	500	4739	220	230/1/50	2,23	6	22	16	7/8	5/8
						32	3334	4196	5279	6572	8062	9735	11578	2034	2149	2284	2435		2597	2765	2934																			
						38	3059	3869	4895	6124	7542	9136	10892	2171	2302	2454	2623		2803	2991	3179																			
						43	2846	3602	4569	5735	7084	8604	10280	2302	2444	2609	2791		2986	3187	3390																			
UP-SE6043GS-EAE00	6S1FOS6C3FI	CP: 400V-3ph-50Hz Fan: 230V-1ph-50Hz	6,4	**SE6043GS-O**	301FO1101AA	25	4313	5374	6700	8278	10092	12124	14355	2238	2357	2500	2663		2841	3029	3223	-	-	1277	538	1005	107	36	67	1	500	4739	220	230/1/50	2,23	6	22	16	7/8	5/8
						32	3918	4926	6189	7693	9421	11353	13472	2395	2538	2708	2900		3107	3325	3548																			
						38	3595	4540	5733	7158	8798	10632	12644	2561	2723	2913	3126		3355	3595	3840																			
						43	3346	4224	5347	6696	8252	9996	11910	2718	2894	3099	3328		3573	3829	4090																			

Note: *Subject to modification without prior notification.*

GENERAL DATA & PERFORMANCE

R452A - LBP - RTG20

CONDENSING UNITS				COMPRESSORS		AMBIENT TEMP.	EN13125 - SUBCOOLING 0K - MIDPOINT COOLING CAPACITY (W)						POWER INPUT (W)						ECO DESIGN		DIMENSIONS (mm)			WEIGHT	ACOUSTICS dB (A)		CONDENSER/FAN						LIQUID RECEIVER	CONNECTION DIAMETERS			
CONDENSING UNITS MODELS	CONDENSING UNIT BOM	VOLTAGE SUPPLY (V)	I NOM (A)	COMPRESSOR MODELS	COMPRESSOR BOM	(°C)	-35°C	-30°C	-25°C	-20°C	-15°C	-10°C	-35°C	-30°C	-25°C	-20°C		-15°C	-10°C	Type	Cop/ Seer	W (width)	D (depth)	H (height)	Net (kg)	Sound Press. @10m	Sound power level	Number of fan	Fan diameter (mm)	Airflow (m^3/h)	Fan power (W)	Voltage supply (V)	Internal volume (dm^3)	dm^3	Suction (mm)	Liquid (mm)	Suction (")	Liquid (")
UP-NT2180GK-EAE00	503HAS6C4FI	CP: 230V-1ph-50Hz Fan: 230V-1ph-50Hz	2,4	NT2180GK-A-CSR	923HA0404AF	25	625	793	999	1238	1507	1799	560	617	682	759		849	954	COP	0,98	982	484	600	69	29	60	1	350	1695	67	230/1/50	0,23	1,6	12	6	1/2	1/4
						32	544	700	886	1097	1331	1583	557	631	710	797		894	1001																			
						38	472	617	783	970	1175	1393	564	647	733	824		921	1026																			
						43	-	547	698	864	1044	1234	-	658	747	838		933	1033																			
UP-NT2192GK-EAE00	503EAS6C4FI	CP: 230V-1ph-50Hz Fan: 230V-1ph-50Hz	2,7	NT2192GK-A-CSR	923EA0404AF	25	674	853	1063	1304	1575	1872	585	658	734	818		913	1025	COP	1	982	484	600	69	29	60	1	350	1695	67	230/1/50	0,23	1,6	12	8	1/2	3/8
						32	583	747	937	1153	1393	1656	590	673	759	852		957	1079																			
						38	506	655	827	1020	1234	1467	593	684	778	879		992	1121																			
						43	-	582	736	910	1101	1308	-	690	790	897		1016	1151																			
UP-NT2212GK-EAE00	505DAS6C4FI	CP: 230V-1ph-50Hz Fan: 230V-1ph-50Hz	3,7	NT2212GK-A-CSR	925DA0204AF	25	890	1122	1406	1740	2121	2544	713	801	899	1010		1135	1274	COP	1,09	982	484	600	69	29	60	1	350	1523	67	230/1/50	0,45	2,3	16	8	1/2	3/8
						32	773	990	1251	1553	1895	2271	718	822	934	1058		1193	1341																			
						38	673	874	1113	1386	1692	2028	727	842	965	1097		1239	1391																			
						43	-	780	998	1245	1521	1821	-	857	987	1125		1270	1425																			
UP-NJX2219GS-EAE00	545ASS6C3FI	CP: 400V-3ph-50Hz Fan: 230V-1ph-50Hz	2,3	NJX2219GS-M	945AS2101AA	25	1231	1604	2059	2586	3174	3812	1000	1138	1290	1457		1640	1840	COP	1,09	1082	490	708	88	34	65	1	400	2673	120	230/1/50	0,71	3,9	16	8	1/2	3/8
						32	1129	1468	1876	2346	2866	3427	1042	1189	1351	1528		1722	1931																			
						38	1018	1328	1698	2119	2582	3079	1064	1223	1397	1586		1791	2012																			
						43	913	1200	1538	1920	2336	2780	1074	1245	1430	1631		1847	2080																			
UP-SE2006GK-EAE00	5S3ACS6C4FI	CP: 230V-1ph-50Hz Fan: 230V-1ph-50Hz	5,6	SE2006GK-C	303AC1204AA	25	1435	1750	2129	2576	3099	3699	1115	1186	1264	1349		1440	1539	COP	1,08	1082	490	708	92	33	64	1	400	2673	120	230/1/50	0,71	3,9	18	10	3/4	3/8
						32	1318	1612	1962	2374	2854	3404	1240	1319	1405	1498		1599	1706																			
						38	1210	1480	1800	2177	2615	3118	1366	1450	1542	1642		1749	1865																			
						43	1120	1365	1656	2000	2400	2861	1493	1580	1676	1780		1893	2015																			
UP-SE2006GS-EAE00	5S3AOS6C3FI	CP: 400V-3ph-50Hz Fan: 230V-1ph-50Hz	2,4	SE2006GS-O	303AO1201AA	25	1436	1751	2129	2577	3099	3700	1106	1177	1254	1338		1428	1526	COP	1,09	1082	490	708	92	33	64	1	400	2673	120	230/1/50	0,71	3,9	18	10	3/4	3/8
						32	1318	1612	1963	2375	2855	3405	1231	1308	1393	1486		1585	1692																			
						38	1211	1480	1801	2178	2616	3120	1355	1438	1529	1628		1735	1849																			
						43	1120	1365	1657	2001	2401	2863	1481	1567	1662	1765		1877	1998																			
UP-SE2008GK-EAE00	5S3BCS6C4FI	CP: 230V-1ph-50Hz Fan: 230V-1ph-50Hz	7,2	SE2008GK-C	303BC1204AA	25	1806	2199	2669	3220	3858	4584	1424	1522	1630	1749		1879	2020	COP	1,05	1082	490	708	92	33	64	1	400	2673	120	230/1/50	0,71	3,9	18	10	3/4	3/8
						32	1654	2017	2448	2951	3531	4191	1589	1696	1815	1945		2087	2240																			
						38	1515	1846	2236	2692	3218	3816	1758	1872	1999	2137		2289	2453																			
						43	1399	1697	2050	2461	2938	3481	1930	2048	2180	2326		2484	2656																			
UP-SE2008GS-EAE00	5S3BOS6C3FI	CP: 400V-3ph-50Hz Fan: 230V-1ph-50Hz	2,7	SE2008GS-O	303BO1201AA	25	1807	2201	2670	3222	3860	4588	1397	1493	1599	1715		1842	1980	COP	1,08	1082	490	708	92	33	64	1	400	2673	120	230/1/50	0,71	3,9	18	10	3/4	3/8
						32	1655	2019	2450	2954	3535	4196	1558	1663	1779	1906		2045	2195																			
						38	1516	1848	2239	2696	3222	3822	1723	1835	1959	2094		2242	2403																			
						43	1400	1700	2053	2465	2943	3488	1891	2007	2136	2278		2433	2602																			
UP-SE2010GK-EAE00	5S3CCS6C4FI	CP: 230V-1ph-50Hz Fan: 230V-1ph-50Hz	8,4	SE2010GK-C	303CC1204AA	25	2097	2550	3087	3715	4436	5251	1668	1788	1922	2071		2234	2412	COP	1,04	1082	490	708	92	33	64	1	400	2673	120	230/1/50	0,71	3,9	18	10	3/4	3/8
						32	1915	2331	2821	3390	4041	4776	1865	1997	2143	2304		2482	2675																			
						38	1751	2128	2569	3081	3667	4328	2069	2209	2365	2538		2727	2933																			
						43	1615	1952	2347	2806	3333	3929	2278	2424	2587	2767		2965	3182																			
UP-SE2010GS-EAE00	5S3COS6C3FI	CP: 400V-3ph-50Hz Fan: 230V-1ph-50Hz	4,3	SE2010GS-O	303CO1201AA	25	2099	2552	3090	3718	4441	5258	1631	1748	1879	2023		2182	2356	COP	1,06	1082	490	708	92	33	64	1	400	2673	120	230/1/50	0,71	3,9	18	10	3/4	3/8
						32	1917	2334	2825	3395	4047	4784	1823	1951	2094	2251		2424	2612																			
						38	1753	2131	2573	3086	3674	4337	2021	2158	2310	2478		2662	2863																			
						43	1618	1956	2352	2813	3341	3940	2225	2367	2526	2701		2894	3105																			
UP-SE2012GS-EAE00	5S3GOS6C3FI	CP: 400V-3ph-50Hz Fan: 230V-1ph-50Hz	5,4	SE2012GS-O	303GO1201AA	25	2793	3406	4142	5014	6030	7198	2105	2240	2387	2547		2721	2907	SEPR	1,77	1277	538	1005	107	36	67	1	500	5195	220	230/1/50	1,34	6	22	12	7/8	1/2
						32	2565	3137	3819	4621	5555	6626	2342	2491	2653	2830		3020	3225																			
						38	2356	2881	3505	4239	5092	6072	2581	2739	2912	3101		3306	3525																			
						43	2180	2657	3225	3894	4674	5573	2820	2984	3165	3363		3577	3808																			
UP-SE2014GS-EAE00	5S3DOS6C3FI	CP: 400V-3ph-50Hz Fan: 230V-1ph-50Hz	5,2	SE2014GS-O	303DO1201AA	25	3238	3945	4792	5791	6951	8278	2246	2394	2558	2737		2931	3142	SEPR	1,91	1277	538	1005	107	36	67	1	500	5195	220	230/1/50	1,34	6	22	12	7/8	1/2
						32	2971	3628	4410	5326	6387	7599	2500	2663	2843	3039		3251	3481																			
						38	2726	3329	4041	4877	5844	6949	2757	2930	3122	3332		3559	3805																			
						43	2522	3068	3715	4474	5356	6366	3016	3196	3396	3615		3853	4111																			
UP-SE2017GS-EAE00	5S3EOS6C3FI	CP: 400V-3ph-50Hz Fan: 230V-1ph-50Hz	6,3	SE2017GS-O	303EO1201AA	25	3803	4628	5612	6766	8097	9610	2581	2760	2959	3178		3418	3680	SEPR	1,95	1277	538	1005	107	36	67	1	500	5195	220	230/1/50	1,34	6	22	12	7/8	1/2
						32	3483	4246	5148	6201	7412	8785	2878	3074	3291	3530		3791	4075																			
						38	3192	3888	4706	5660	6758	8003	3181	3390	3621	3876		4154	4456																			
						43	2950	3577	4316	5179	6174	7306	3488	3705	3947	4213		4504	4821																			
UP-SE2020GS-EAE00	5S3FOS6C3FI	CP: 400V-3ph-50Hz Fan: 230V-1ph-50Hz	6,9	SE2020GS-O	303FO1201AA	25	4403	5350	6473	7782	9282	10973	3012	3232	3477	3749		4049	4378	SEPR	1,93	1277	538	1005	107	36	67	1	500	5195	220	230/1/50	1,34	6	22	12	7/8	1/2
						32	4023	4894	5917	7104	8458	9982	3364	3604	3871	4167		4492	4848																			
						38	3681	4470	5393	6461	7680	9052	3729	3984	4268	4583		4929	5307																			
						43	3399	4105	4933	5892	6989	8228	4102	4367	4663	4992		5353	5749																			

Note: *Subject to modification without prior notification.*

GENERAL DATA & PERFORMANCE

R452A - LBP - SH10K

CONDENSING UNITS				COMPRESSORS		AMBIENT TEMP.	EN13125 - SUBCOOLING 0K - MIDPOINT COOLING CAPACITY (W)						POWER INPUT (W)						ECO DESIGN		DIMENSIONS (mm)			WEIGHT	ACOUSTICS dB (A)		CONDENSER/FAN						LIQUID RECEIVER	CONNECTION DIAMETERS			
CONDENSING UNITS MODELS	CONDENSING UNIT BOM	VOLTAGE SUPPLY (V)	I NOM (A)	COMPRESSOR MODELS	COMPRESSOR BOM	(°C)	-35°C	-30°C	-25°C	-20°C	-15°C	-10°C	-35°C	-30°C	-25°C	-20°C		-15°C	-10°C	Type	Cop/ Seer	W (width)	D (depth)	H (height)	Net (kg)	Sound Press. @10m	Sound power level	Number of fan	Fan diameter (mm)	Airflow (m^3/h)	Fan power (W)	Voltage supply (V)	Internal volume (dm^3)	dm^3	Suction (mm)	Liquid (mm)	Suction (")	Liquid (")
UP-NT2180GK-EAE00	503HAS6C4FI	CP: 230V-1ph-50Hz Fan: 230V-1ph-50Hz	2,4	NT2180GK-A-CSR	923HA0404AF	25	571	732	932	1168	1435	1730	556	611	674	749		837	942	-	-	982	484	600	69	29	60	1	350	1695	67	230/1/50	0,23	1,6	12	6	1/2	1/4
						32	487	634	812	1019	1252	1507	552	623	700	785		880	987																			
						38	412	546	705	887	1090	1313	557	638	722	811		907	1012																			
						43	-	474	616	777	956	1151	-	648	735	824		919	1019																			
UP-NT2192GK-EAE00	503EAS6C4FI	CP: 230V-1ph-50Hz Fan: 230V-1ph-50Hz	2,7	NT2192GK-A-CSR	923EA0404AF	25	615	787	992	1229	1499	1799	580	651	725	807		900	1012	-	-	982	484	600	69	29	60	1	350	1695	67	230/1/50	0,23	1,6	12	8	1/2	3/8
						32	522	677	859	1070	1309	1574	584	664	748	839		943	1063																			
						38	441	580	743	931	1143	1379	586	674	765	864		975	1103																			
						43	-	503	649	816	1006	1217	-	679	776	881		998	1132																			
UP-NT2212GK-EAE00	505DAS6C4FI	CP: 230V-1ph-50Hz Fan: 230V-1ph-50Hz	3,7	NT2212GK-A-CSR	925DA0204AF	25	814	1038	1314	1643	2023	2451	708	793	889	998		1121	1260	-	-	982	484	600	69	29	60	1	350	1523	67	230/1/50	0,45	2,3	16	8	1/2	3/8
						32	693	899	1149	1445	1785	2165	711	811	921	1043		1176	1323																			
						38	589	777	1003	1269	1572	1912	718	830	950	1079		1219	1370																			
						43	-	677	882	1121	1394	1699	-	844	970	1105		1249	1403																			
UP-NJX2219GS-EAE00	545ASS6C3FI	CP: 400V-3ph-50Hz Fan: 230V-1ph-50Hz	2,3	NJX2219GS-M	945AS2101AA	25	1118	1478	1922	2442	3030	3677	994	1128	1277	1441		1623	1821	-	-	1082	490	708	88	34	65	1	400	2673	120	230/1/50	0,71	3,9	16	8	1/2	3/8
						32	1016	1338	1730	2189	2706	3274	1031	1175	1334	1508		1699	1908																			
						38	896	1186	1537	1945	2405	2908	1052	1207	1377	1562		1764	1984																			
						43	783	1047	1365	1733	2146	2597	1060	1227	1408	1604		1817	2048																			
UP-SE2006GK-EAE00	5S3ACS6C4FI	CP: 230V-1ph-50Hz Fan: 230V-1ph-50Hz	5,6	SE2006GK-C	303AC1204AA	25	1316	1621	1991	2435	2959	3567	1115	1180	1253	1333		1421	1518	-	-	1082	490	708	92	33	64	1	400	2673	120	230/1/50	0,71	3,9	18	10	3/4	3/8
						32	1178	1460	1801	2208	2688	3245	1219	1294	1377	1469		1570	1679																			
						38	1054	1311	1621	1992	2430	2940	1341	1422	1512	1610		1718	1836																			
						43	950	1181	1462	1799	2200	2667	1466	1549	1641	1744		1856	1977																			
UP-SE2006GS-EAE00	5S3AOS6C3FI	CP: 400V-3ph-50Hz Fan: 230V-1ph-50Hz	2,4	SE2006GS-O	303AO1201AA	25	1317	1621	1992	2436	2959	3568	1106	1171	1243	1322		1410	1505	-	-	1082	490	708	92	33	64	1	400	2673	120	230/1/50	0,71	3,9	18	10	3/4	3/8
						32	1178	1460	1801	2209	2689	3247	1209	1284	1366	1457		1557	1665																			
						38	1055	1312	1622	1993	2432	2942	1330	1410	1499	1597		1704	1820																			
						43	950	1182	1463	1801	2201	2669	1453	1536	1628	1729		1840	1961																			
UP-SE2008GK-EAE00	5S3BCS6C4FI	CP: 230V-1ph-50Hz Fan: 230V-1ph-50Hz	7,2	SE2008GK-C	303BC1204AA	25	1650	2030	2488	3033	3671	4407	1415	1505	1606	1719		1845	1986	-	-	1082	490	708	92	33	64	1	400	2673	120	230/1/50	0,71	3,9	18	10	3/4	3/8
						32	1472	1821	2239	2735	3316	3984	1557	1660	1776	1904		2045	2201																			
						38	1314	1628	2006	2455	2980	3586	1722	1832	1955	2092		2242	2407																			
						43	1179	1461	1800	2205	2681	3233	1888	2001	2128	2268		2423	2592																			
UP-SE2008GS-EAE00	5S3BOS6C3FI	CP: 400V-3ph-50Hz Fan: 230V-1ph-50Hz	2,7	SE2008GS-O	303BO1201AA	25	1652	2031	2490	3036	3675	4411	1388	1476	1575	1686		1809	1946	-	-	1082	490	708	92	33	64	1	400	2673	120	230/1/50	0,71	3,9	18	10	3/4	3/8
						32	1474	1822	2241	2738	3320	3989	1527	1628	1741	1866		2004	2157																			
						38	1315	1630	2009	2458	2985	3592	1688	1796	1916	2050		2197	2358																			
						43	1181	1463	1803	2209	2686	3240	1851	1961	2085	2222		2374	2539																			
UP-SE2010GK-EAE00	5S3CCS6C4FI	CP: 230V-1ph-50Hz Fan: 230V-1ph-50Hz	8,4	SE2010GK-C	303CC1204AA	25	1911	2346	2871	3491	4212	5037	1650	1761	1886	2028		2188	2367	-	-	1082	490	708	92	33	64	1	400	2673	120	230/1/50	0,71	3,9	18	10	3/4	3/8
						32	1700	2098	2574	3135	3786	4530	1825	1951	2093	2252		2429	2625																			
						38	1513	1870	2297	2800	3386	4057	2024	2158	2309	2478		2664	2869																			
						43	1355	1673	2053	2504	3031	3638	2224	2361	2516	2688		2878	3087																			
UP-SE2010GS-EAE00	5S3COS6C3FI	CP: 400V-3ph-50Hz Fan: 230V-1ph-50Hz	4,3	SE2010GS-O	303CO1201AA	25	1913	2349	2874	3495	4217	5044	1613	1722	1844	1982		2138	2312	-	-	1082	490	708	92	33	64	1	400	2673	120	230/1/50	0,71	3,9	18	10	3/4	3/8
						32	1703	2101	2578	3140	3792	4538	1783	1906	2045	2200		2372	2563																			
						38	1516	1874	2302	2806	3394	4067	1977	2108	2256	2420		2602	2801																			
						43	1358	1677	2058	2511	3040	3650	2172	2305	2456	2624		2810	3014																			
UP-SE2012GS-EAE00	5S3GOS6C3FI	CP: 400V-3ph-50Hz Fan: 230V-1ph-50Hz	5,4	SE2012GS-O	303GO1201AA	25	2562	3155	3876	4739	5758	6942	2105	2229	2366	2518		2685	2868	-	-	1277	538	1005	107	36	67	1	500	5195	220	230/1/50	1,34	6	22	12	7/8	1/2
						32	2293	2842	3505	4298	5233	6318	2302	2444	2602	2775		2966	3173																			
						38	2052	2553	3157	3880	4733	5726	2533	2686	2855	3042		3247	3469																			
						43	1849	2301	2848	3505	4285	5197	2768	2925	3101	3295		3507	3737																			
UP-SE2014GS-EAE00	5S3DOS6C3FI	CP: 400V-3ph-50Hz Fan: 230V-1ph-50Hz	5,2	SE2014GS-O	303DO1201AA	25	2965	3649	4477	5466	6627	7971	2238	2375	2528	2697		2885	3094	-	-	1277	538	1005	107	36	67	1	500	5195	220	230/1/50	1,34	6	22	12	7/8	1/2
						32	2651	3282	4042	4947	6009	7237	2453	2610	2784	2977		3190	3423																			
						38	2372	2945	3635	4457	5424	6544	2703	2871	3058	3264		3492	3740																			
						43	2135	2651	3275	4021	4902	5927	2956	3128	3321	3535		3769	4025																			
UP-SE2017GS-EAE00	5S3EOS6C3FI	CP: 400V-3ph-50Hz Fan: 230V-1ph-50Hz	6,3	SE2017GS-O	303EO1201AA	25	3475	4270	5230	6371	7704	9235	2562	2727	2913	3121		3354	3615	-	-	1277	538	1005	107	36	67	1	500	5195	220	230/1/50	1,34	6	22	12	7/8	1/2
						32	3101	3832	4709	5748	6959	8350	2819	3007	3218	3453		3714	4002																			
						38	2769	3430	4223	5161	6258	7521	3115	3316	3541	3791		4067	4370																			
						43	2489	3081	3793	4640	5635	6786	3412	3618	3849	4106		4390	4700																			
UP-SE2020GS-EAE00	5S3FOS6C3FI	CP: 400V-3ph-50Hz Fan: 230V-1ph-50Hz	6,9	SE2020GS-O	303FO1201AA	25	4012	4923	6018	7311	8811	10521	2977	3179	3409	3670		3963	4294	-	-	1277	538	1005	107	36	67	1	500	5195	220	230/1/50	1,34	6	22	12	7/8	1/2
						32	3573	4406	5399	6569	7923	9467	3290	3520	3779	4070		4394	4754																			
						38	3183	3932	4824	5874	7094	8487	3645	3890	4165	4472		4813	5188																			
						43	2854	3521	4318	5260	6359	7621	4000	4250	4531	4845		5193	5574																			

Note: *Subject to modification without prior notification.*

GENERAL DATA & PERFORMANCE

R449A - LBP - RTG20

CONDENSING UNITS				COMPRESSORS		AMBIENT TEMP.	EN13125 - SUBCOOLING 0K - MIDPOINT COOLING CAPACITY (W)						POWER INPUT (W)						ECO DESIGN		DIMENSIONS (mm)			WEIGHT	ACOUSTICS dB (A)		CONDENSER/FAN						LIQUID RECEIVER	CONNECTION DIAMETERS			
CONDENSING UNITS MODELS	CONDENSING UNIT BOM	VOLTAGE SUPPLY (V)	I NOM (A)	COMPRESSOR MODELS	COMPRESSOR BOM	(°C)	-35°C	-30°C	-25°C	-20°C	-15°C	-10°C	-35°C	-30°C	-25°C	-20°C		-15°C	-10°C	Type	Cop/ Seer	W (width)	D (depth)	H (height)	Net (kg)	Sound Press. @10m	Sound power level	Number of fan	Fan diameter (mm)	Airflow (m^3/h)	Fan power (W)	Voltage supply (V)	Internal volume (dm^3)	dm^3	Suction (mm)	Liquid (mm)	Suction (")	Liquid (")
UP-SE2006GK-EAE00	5S3ACS6C4FI	CP: 230V-1ph-50Hz Fan: 230V-1ph-50Hz	5,6	**SE2006GK-C**	303AC1204AA	25	1341	1689	2087	2543	3064	3656	1062	1131	1206	1286		1372	1463	COP	1,06	1082	490	708	92	33	64	1	400	2673	120	230/1/50	0,71	3,9	18	10	3/4	3/8
						32	1270	1575	1931	2343	2820	3366	1185	1259	1341	1431		1527	1629																		
						38	1195	1469	1790	2168	2609	3120	1323	1401	1488	1585		1690	1804																		
						43	1125	1373	1669	2020	2434	2917	1469	1550	1643	1745		1858	1981																		
UP-SE2006GS-EAE00	5S3AOS6C3FI	CP: 400V-3ph-50Hz Fan: 230V-1ph-50Hz	2,4	**SE2006GS-O**	303AO1201AA	25	1341	1689	2087	2544	3065	3657	1054	1122	1196	1276		1361	1451	COP	1,06	1082	490	708	92	33	64	1	400	2673	120	230/1/50	0,71	3,9	18	10	3/4	3/8
						32	1270	1576	1931	2344	2820	3367	1176	1249	1331	1419		1514	1615																		
						38	1196	1469	1791	2169	2610	3121	1312	1389	1476	1572		1676	1788																		
						43	1125	1374	1670	2021	2435	2918	1457	1537	1629	1731		1842	1964																		
UP-SE2008GK-EAE00	5S3BCS6C4FI	CP: 230V-1ph-50Hz Fan: 230V-1ph-50Hz	7,2	**SE2008GK-C**	303BC1204AA	25	1698	2128	2618	3177	3812	4530	1352	1446	1550	1663		1785	1916	COP	1,04	1082	490	708	92	33	64	1	400	2673	120	230/1/50	0,71	3,9	18	10	3/4	3/8
						32	1603	1980	2417	2921	3501	4165	1519	1620	1734	1859		1996	2144																		
						38	1504	1841	2235	2696	3233	3853	1706	1814	1936	2072		2223	2388																		
						43	1411	1716	2077	2506	3008	3593	1907	2020	2150	2296		2459	2639																		
UP-SE2008GS-EAE00	5S3BOS6C3FI	CP: 400V-3ph-50Hz Fan: 230V-1ph-50Hz	2,7	**SE2008GS-O**	303BO1201AA	25	1698	2129	2620	3179	3815	4534	1327	1419	1520	1631		1750	1878	COP	1,06	1082	490	708	92	33	64	1	400	2673	120	230/1/50	0,71	3,9	18	10	3/4	3/8
						32	1604	1981	2418	2923	3504	4169	1489	1589	1700	1822		1956	2101																		
						38	1506	1842	2237	2699	3237	3857	1672	1777	1897	2030		2177	2339																		
						43	1412	1717	2080	2509	3012	3598	1869	1979	2106	2248		2407	2584																		
UP-SE2010GK-EAE00	5S3CCS6C4FI	CP: 230V-1ph-50Hz Fan: 230V-1ph-50Hz	8,4	**SE2010GK-C**	303CC1204AA	25	1981	2473	3032	3667	4386	5196	1581	1697	1825	1966		2120	2288	COP	1,03	1082	490	708	92	33	64	1	400	2673	120	230/1/50	0,71	3,9	18	10	3/4	3/8
						32	1865	2296	2793	3365	4022	4770	1783	1908	2049	2206		2379	2570																		
						38	1746	2129	2577	3100	3707	4405	2013	2146	2299	2470		2662	2876																		
						43	1633	1979	2390	2874	3442	4100	2262	2402	2565	2749		2958	3193																		
UP-SE2010GS-EAE00	5S3COS6C3FI	CP: 400V-3ph-50Hz Fan: 230V-1ph-50Hz	4,3	**SE2010GS-O**	303CO1201AA	25	1982	2475	3035	3670	4390	5201	1546	1659	1784	1921		2071	2235	COP	1,06	1082	490	708	92	33	64	1	400	2673	120	230/1/50	0,71	3,9	18	10	3/4	3/8
						32	1867	2298	2796	3369	4027	4776	1743	1865	2002	2155		2323	2509																		
						38	1748	2132	2581	3105	3713	4412	1966	2096	2245	2412		2598	2806																		
						43	1635	1982	2394	2880	3448	4108	2208	2344	2503	2682		2886	3114																		
UP-SE2012GS-EAE00	5S3GOS6C3FI	CP: 400V-3ph-50Hz Fan: 230V-1ph-50Hz	5,4	**SE2012GS-O**	303GO1201AA	25	2609	3286	4063	4951	5966	7119	2004	2134	2276	2428		2590	2761	SEPR	1,64	1277	538	1005	107	36	67	1	500	5195	220	230/1/50	1,34	6	22	12	7/8	1/2
						32	2471	3067	3759	4563	5491	6556	2237	2377	2532	2701		2882	3075																		
						38	2327	2860	3487	4223	5083	6078	2496	2644	2810	2992		3191	3405																		
						43	2190	2674	3251	3935	4741	5683	2773	2926	3100	3294		3508	3740																		
UP-SE2014GS-EAE00	5S3DOS6C3FI	CP: 400V-3ph-50Hz Fan: 230V-1ph-50Hz	5,2	**SE2014GS-O**	303DO1201AA	25	3033	3811	4701	5717	6873	8183	2135	2278	2435	2605		2787	2981	SEPR	1,68	1277	538	1005	107	36	67	1	500	5195	220	230/1/50	1,34	6	22	12	7/8	1/2
						32	2869	3553	4347	5265	6323	7535	2388	2542	2713	2901		3105	3324																		
						38	2699	3311	4029	4870	5850	6983	2669	2832	3016	3220		3443	3686																		
						43	2538	3093	3753	4535	5455	6526	2970	3140	3334	3551		3791	4055																		
UP-SE2017GS-EAE00	5S3EOS6C3FI	CP: 400V-3ph-50Hz Fan: 230V-1ph-50Hz	6,3	**SE2017GS-O**	303EO1201AA	25	3577	4481	5509	6679	8006	9504	2449	2622	2812	3020		3245	3488	SEPR	1,73	1277	538	1005	107	36	67	1	500	5195	220	230/1/50	1,34	6	22	12	7/8	1/2
						32	3378	4171	5087	6144	7358	8744	2749	2935	3143	3373		3625	3899																		
						38	3172	3879	4707	5675	6799	8095	3085	3282	3506	3757		4034	4339																		
						43	2976	3618	4378	5277	6331	7556	3446	3652	3889	4157		4457	4790																		
UP-SE2020GS-EAE00	5S3FOS6C3FI	CP: 400V-3ph-50Hz Fan: 230V-1ph-50Hz	6,9	**SE2020GS-O**	303FO1201AA	25	4162	5194	6362	7687	9184	10869	2854	3064	3299	3557		3840	4150	SEPR	1,73	1277	538	1005	107	36	67	1	500	5195	220	230/1/50	1,34	6	22	12	7/8	1/2
						32	3921	4824	5864	7060	8429	9987	3215	3443	3701	3987		4305	4656																		
						38	3673	4476	5415	6509	7776	9232	3625	3868	4146	4460		4811	5204																		
						43	3437	4165	5026	6041	7228	8603	4067	4323	4619	4956		5338	5769																		

Note: *Subject to modification without prior notification.*

GENERAL DATA & PERFORMANCE

R449A - LBP - SH10K

CONDENSING UNITS				COMPRESSORS		AMBIENT TEMP.	EN13125 - SUBCOOLING 0K - MIDPOINT COOLING CAPACITY (W)						POWER INPUT (W)						ECO DESIGN		DIMENSIONS (mm)			WEIGHT	ACOUSTICS dB (A)		CONDENSER/FAN						LIQUID RECEIVER	CONNECTION DIAMETERS			
CONDENSING UNITS MODELS	CONDENSING UNIT BOM	VOLTAGE SUPPLY (V)	I NOM (A)	COMPRESSOR MODELS	COMPRESSOR BOM	(°C)	-35°C	-30°C	-25°C	-20°C	-15°C	-10°C	-35°C	-30°C	-25°C	-20°C		-15°C	-10°C	Type	Cop/ Seer	W (width)	D (depth)	H (height)	Net (kg)	Sound Press. @10m	Sound power level	Number of fan	Fan diameter (mm)	Airflow (m^3/h)	Fan power (W)	Voltage supply (V)	Internal volume (dm^3)	dm^3	Suction (mm)	Liquid (mm)	Suction (")	Liquid (")
UP-SE2006GK-EAE00	5S3ACS6C4FI	CP: 230V-1ph-50Hz Fan: 230V-1ph-50Hz	5,6	**SE2006GK-C**	303AC1204AA	25	1286	1632	2030	2488	3013	3611	1068	1132	1203	1280		1363	1452	-	-	1082	490	708	92	33	64	1	400	2673	120	230/1/50	0,71	3,9	18	10	3/4	3/8
						32	1212	1512	1864	2274	2750	3300	1178	1249	1329	1417		1512	1615																			
						38	1121	1387	1703	2078	2518	3031	1315	1390	1476	1571		1675	1789																			
						43	1034	1275	1566	1913	2327	2813	1461	1538	1627	1728		1839	1960																			
UP-SE2006GS-EAE00	5S3AOS6C3FI	CP: 400V-3ph-50Hz Fan: 230V-1ph-50Hz	2,4	**SE2006GS-O**	303AO1201AA	25	1286	1632	2030	2488	3013	3612	1060	1124	1194	1270		1352	1441	-	-	1082	490	708	92	33	64	1	400	2673	120	230/1/50	0,71	3,9	18	10	3/4	3/8
						32	1213	1513	1864	2275	2751	3301	1168	1239	1318	1405		1500	1602																			
						38	1121	1387	1704	2078	2519	3032	1304	1379	1463	1558		1661	1774																			
						43	1035	1276	1566	1914	2328	2814	1449	1526	1614	1713		1823	1943																			
UP-SE2008GK-EAE00	5S3BCS6C4FI	CP: 400V-3ph-50Hz Fan: 230V-1ph-50Hz	7,2	**SE2008GK-C**	303BC1204AA	25	1630	2057	2546	3105	3743	4467	1355	1443	1541	1650		1769	1899	-	-	1082	490	708	92	33	64	1	400	2673	120	230/1/50	0,71	3,9	18	10	3/4	3/8
						32	1527	1896	2326	2826	3405	4070	1507	1605	1716	1839		1976	2125																			
						38	1405	1731	2118	2574	3110	3732	1694	1798	1917	2051		2200	2364																			
						43	1292	1587	1942	2367	2870	3461	1893	2000	2124	2265		2423	2599																			
UP-SE2008GS-EAE00	5S3BOS6C3FI	CP: 400V-3ph-50Hz Fan: 230V-1ph-50Hz	2,7	**SE2008GS-O**	303BO1201AA	25	1631	2058	2548	3107	3746	4470	1329	1415	1512	1618		1734	1861	-	-	1082	490	708	92	33	64	1	400	2673	120	230/1/50	0,71	3,9	18	10	3/4	3/8
						32	1528	1897	2328	2829	3408	4075	1478	1574	1682	1803		1936	2082																			
						38	1406	1733	2120	2577	3113	3737	1661	1762	1879	2009		2155	2315																			
						43	1293	1590	1945	2370	2874	3466	1855	1959	2081	2218		2373	2545																			
UP-SE2010GK-EAE00	5S3CCS6C4FI	CP: 230V-1ph-50Hz Fan: 230V-1ph-50Hz	8,4	**SE2010GK-C**	303CC1204AA	25	1903	2391	2946	3580	4300	5114	1580	1688	1810	1946		2098	2265	-	-	1082	490	708	92	33	64	1	400	2673	120	230/1/50	0,71	3,9	18	10	3/4	3/8
						32	1773	2193	2681	3248	3901	4650	1769	1889	2027	2181		2354	2545																			
						38	1625	1997	2435	2952	3557	4259	1998	2126	2274	2441		2629	2839																			
						43	1491	1827	2230	2711	3281	3949	2241	2373	2527	2704		2904	3129																			
UP-SE2010GS-EAE00	5S3COS6C3FI	CP: 400V-3ph-50Hz Fan: 230V-1ph-50Hz	4,3	**SE2010GS-O**	303CO1201AA	25	1904	2392	2949	3584	4305	5120	1545	1651	1770	1903		2050	2213	-	-	1082	490	708	92	33	64	1	400	2673	120	230/1/50	0,71	3,9	18	10	3/4	3/8
						32	1774	2196	2685	3252	3907	4657	1729	1846	1980	2131		2299	2485																			
						38	1627	1999	2439	2957	3563	4266	1951	2076	2220	2383		2566	2771																			
						43	1494	1830	2234	2716	3287	3957	2188	2316	2467	2639		2833	3052																			
UP-SE2012GS-EAE00	5S3GOS6C3FI	CP: 400V-3ph-50Hz Fan: 230V-1ph-50Hz	5,4	**SE2012GS-O**	303GO1201AA	25	2502	3176	3951	4843	5866	7032	2016	2138	2272	2417		2574	2742	-	-	1277	538	1005	107	36	67	1	500	5195	220	230/1/50	1,34	6	22	12	7/8	1/2
						32	2360	2944	3629	4428	5357	6428	2223	2358	2509	2675		2855	3050																			
						38	2182	2701	3317	4047	4905	5906	2481	2624	2785	2965		3163	3377																			
						43	2014	2484	3050	3728	4534	5482	2757	2904	3072	3261		3470	3700																			
UP-SE2014GS-EAE00	5S3DOS6C3FI	CP: 400V-3ph-50Hz Fan: 230V-1ph-50Hz	5,2	**SE2014GS-O**	303DO1201AA	25	2911	3684	4572	5591	6754	8077	2144	2277	2426	2589		2765	2957	-	-	1277	538	1005	107	36	67	1	500	5195	220	230/1/50	1,34	6	22	12	7/8	1/2
						32	2737	3408	4191	5103	6161	7377	2371	2520	2687	2872		3074	3295																			
						38	2528	3122	3827	4660	5638	6776	2652	2809	2988	3189		3410	3653																			
						43	2331	2870	3517	4292	5211	6291	2951	3113	3299	3510		3745	4004																			
UP-SE2017GS-EAE00	5S3EOS6C3FI	CP: 400V-3ph-50Hz Fan: 230V-1ph-50Hz	6,3	**SE2017GS-O**	303EO1201AA	25	3436	4332	5357	6527	7859	9368	2453	2614	2794	2994		3214	3456	-	-	1277	538	1005	107	36	67	1	500	5195	220	230/1/50	1,34	6	22	12	7/8	1/2
						32	3217	3993	4895	5943	7153	8543	2728	2907	3110	3337		3588	3864																			
						38	2962	3649	4461	5418	6538	7840	3063	3253	3471	3716		3990	4293																			
						43	2727	3349	4095	4986	6041	7279	3419	3615	3842	4100		4390	4714																			
UP-SE2020GS-EAE00	5S3FOS6C3FI	CP: 400V-3ph-50Hz Fan: 230V-1ph-50Hz	6,9	**SE2020GS-O**	303FO1201AA	25	3999	5020	6182	7504	9002	10694	2850	3047	3271	3521		3799	4108	-	-	1277	538	1005	107	36	67	1	500	5195	220	230/1/50	1,34	6	22	12	7/8	1/2
						32	3726	4607	5629	6812	8174	9734	3188	3408	3659	3942		4258	4610																			
						38	3419	4198	5117	6199	7462	8925	3597	3830	4099	4405		4750	5135																			
						43	3140	3846	4692	5699	6891	8287	4028	4269	4550	4872		5238	5650																			

Note: *Subject to modification without prior notification.*

GENERAL DATA & PERFORMANCE

R404A - LBP - RTG20

CONDENSING UNITS				COMPRESSORS		AMBIENT TEMP.	EN13125 - SUBCOOLING OK - MIDPOINT COOLING CAPACITY (W)						POWER INPUT (W)						ECO DESIGN		DIMENSIONS (mm)			WEIGHT	ACOUSTICS dB (A)		CONDENSER/FAN						LIQUID RECEIVER	CONNECTION DIAMETERS			
CONDENSING UNITS MODELS	CONDENSING UNIT BOM	VOLTAGE SUPPLY (V)	I NOM (A)	COMPRESSOR MODELS	COMPRESSOR BOM	(°C)	-35°C	-30°C	-25°C	-20°C	-15°C	-10°C	-35°C	-30°C	-25°C	-20°C		-15°C	-10°C	Type	Cop/ Seer	W (width)	D (depth)	H (height)	Net (kg)	Sound Press. @10m	Sound power level	Number of fan	Fan diameter (mm)	Airflow (m^3/h)	Fan power (W)	Voltage supply (V)	Internal volume (dm^3)	dm^3	Suction (mm)	Liquid (mm)	Suction (")	Liquid (")
UP-NT2180GK-EAE00	503HAS6C4FI	CP: 230V-1ph-50Hz Fan: 230V-1ph-50Hz	2,4	NT2180GK-A-CSR	923HA0404AF	25	632	803	1009	1245	1504	1780	567	622	683	753		835	930	COP	0,97	982	484	600	69	29	60	1	350	1695	67	230/1/50	0,23	1,6	12	6	1/2	1/4
						32	554	712	898	1107	1334	1572	569	638	711	791		881	980																			
						38	488	634	801	987	1185	1392	575	653	734	820		914	1015																			
						43	-	568	720	885	1060	1240	-	666	752	842		937	1039																			
UP-NT2192GK-EAE00	503EAS6C4FI	CP: 230V-1ph-50Hz Fan: 230V-1ph-50Hz	2,7	NT2192GK-A-CSR	923EA0404AF	25	681	866	1078	1315	1574	1851	590	663	736	813		899	999	COP	0,99	982	484	600	69	29	60	1	350	1695	67	230/1/50	0,23	1,6	12	8	1/2	3/8
						32	594	762	953	1165	1396	1643	600	679	760	846		942	1054																			
						38	523	675	847	1038	1244	1462	605	691	780	875		982	1106																			
						43	-	604	760	931	1116	1311	-	700	796	901		1018	1152																			
UP-NT2212GK-EAE00	505DAS6C4FI	CP: 230V-1ph-50Hz Fan: 230V-1ph-50Hz	3,7	NT2212GK-A-CSR	925DA0204AF	25	903	1140	1423	1750	2112	2504	719	805	899	1004		1119	1245	COP	1,08	982	484	600	69	29	60	1	350	1523	67	230/1/50	0,45	2,3	16	8	1/2	3/8
						32	786	1005	1265	1562	1889	2239	731	827	933	1048		1174	1310																			
						38	694	896	1133	1402	1696	2010	741	848	964	1089		1224	1369																			
						43	-	807	1025	1268	1534	1815	-	867	991	1124		1267	1420																			
UP-NJX2219GS-EAE00	545ASS6C3FI	CP: 400V-3ph-50Hz Fan: 230V-1ph-50Hz	2,3	NJX2219GS-M	945AS2101AA	25	1335	1714	2165	2681	3252	3870	1047	1180	1322	1477		1644	1825	COP	1,12	1082	490	708	88	34	65	1	400	2673	120	230/1/50	0,71	3,9	16	8	1/2	3/8
						32	1213	1553	1957	2417	2925	3472	1083	1227	1382	1549		1731	1928																			
						38	1092	1401	1766	2179	2635	3123	1109	1264	1431	1612		1807	2019																			
						43	-	1266	1599	1976	2388	2829	-	1291	1469	1662		1870	2095																			
UP-SE2006GK-EAE00	5S3ACS6C4FI	CP: 230V-1ph-50Hz Fan: 230V-1ph-50Hz	5,6	SE2006GK-C	303AC1204AA	25	1440	1779	2178	2633	3145	3710	1113	1185	1265	1352		1445	1546	COP	1,07	1082	490	708	92	33	64	1	400	2673	120	230/1/50	0,71	3,9	18	10	3/4	3/8
						32	1321	1631	1993	2406	2868	3376	1235	1313	1399	1491		1591	1698																			
						38	1209	1491	1819	2192	2609	3068	1358	1441	1532	1631		1736	1850																			
						43	1113	1370	1667	2005	2383	2799	1487	1575	1670	1773		1884	2003																			
UP-SE2006GS-EAE00	5S3AOS6C3FI	CP: 400V-3ph-50Hz Fan: 230V-1ph-50Hz	2,4	SE2006GS-O	303AO1201AA	25	1440	1780	2178	2634	3146	3711	1104	1176	1255	1341		1434	1533	COP	1,08	1082	490	708	92	33	64	1	400	2673	120	230/1/50	0,71	3,9	18	10	3/4	3/8
						32	1321	1632	1994	2407	2869	3378	1225	1303	1387	1479		1578	1684																			
						38	1209	1491	1820	2193	2610	3070	1347	1430	1520	1617		1722	1834																			
						43	1114	1370	1668	2006	2385	2801	1475	1561	1656	1758		1868	1986																			
UP-SE2008GK-EAE00	5S3BCS6C4FI	CP: 230V-1ph-50Hz Fan: 230V-1ph-50Hz	7,2	SE2008GK-C	303BC1204AA	25	1812	2233	2723	3280	3899	4575	1422	1521	1631	1751		1881	2022	COP	1,05	1082	490	708	92	33	64	1	400	2673	120	230/1/50	0,71	3,9	18	10	3/4	3/8
						32	1656	2038	2481	2982	3536	4140	1581	1689	1807	1935		2074	2225																			
						38	1511	1857	2255	2705	3202	3742	1748	1862	1988	2125		2274	2434																			
						43	1389	1701	2060	2464	2911	3396	1925	2046	2179	2323		2480	2649																			
UP-SE2008GS-EAE00	5S3BOS6C3FI	CP: 400V-3ph-50Hz Fan: 230V-1ph-50Hz	2,7	SE2008GS-O	303BO1201AA	25	1813	2234	2725	3283	3902	4579	1394	1492	1599	1717		1844	1982	COP	1,07	1082	490	708	92	33	64	1	400	2673	120	230/1/50	0,71	3,9	18	10	3/4	3/8
						32	1657	2040	2484	2985	3540	4146	1551	1656	1771	1897		2033	2180																			
						38	1512	1859	2258	2708	3206	3748	1713	1825	1949	2083		2228	2384																			
						43	1390	1703	2063	2468	2916	3403	1886	2005	2134	2276		2429	2594																			
UP-SE2010GK-EAE00	5S3CCS6C4FI	CP: 230V-1ph-50Hz Fan: 230V-1ph-50Hz	8,4	SE2010GK-C	303CC1204AA	25	2103	2586	3145	3775	4470	5222	1665	1787	1922	2070		2232	2408	COP	1,03	1082	490	708	92	33	64	1	400	2673	120	230/1/50	0,71	3,9	18	10	3/4	3/8
						32	1916	2353	2855	3418	4037	4705	1855	1987	2133	2292		2466	2654																			
						38	1744	2137	2587	3090	3641	4235	2058	2200	2356	2527		2713	2914																			
						43	1601	1954	2356	2806	3298	3827	2277	2427	2593	2774		2971	3184																			
UP-SE2010GS-EAE00	5S3COS6C3FI	CP: 400V-3ph-50Hz Fan: 230V-1ph-50Hz	4,3	SE2010GS-O	303CO1201AA	25	2105	2588	3148	3779	4475	5229	1628	1747	1879	2023		2181	2353	COP	1,06	1082	490	708	92	33	64	1	400	2673	120	230/1/50	0,71	3,9	18	10	3/4	3/8
						32	1918	2356	2859	3423	4044	4714	1813	1942	2084	2239		2408	2592																			
						38	1747	2141	2591	3096	3649	4245	2010	2149	2301	2467		2648	2844																			
						43	1604	1958	2362	2813	3307	3838	2223	2369	2531	2707		2898	3106																			
UP-SE2012GS-EAE00	5S3GOS6C3FI	CP: 400V-3ph-50Hz Fan: 230V-1ph-50Hz	5,4	SE2012GS-O	303GO1201AA	25	2802	3462	4238	5125	6121	7221	2101	2238	2389	2553		2731	2921	SEPR	1,8	1277	538	1005	107	36	67	1	500	5195	220	230/1/50	1,34	6	22	12	7/8	1/2
						32	2571	3175	3880	4684	5583	6574	2332	2480	2642	2817		3006	3209																			
						38	2353	2902	3542	4269	5081	5975	2564	2723	2895	3081		3281	3496																			
						43	2167	2667	3247	3906	4642	5452	2808	2974	3154	3350		3560	3784																			
UP-SE2014GS-EAE00	5S3DOS6C3FI	CP: 400V-3ph-50Hz Fan: 230V-1ph-50Hz	5,2	SE2014GS-O	303DO1201AA	25	3248	4008	4897	5910	7041	8283	2241	2393	2559	2741		2939	3152	SEPR	1,95	1277	538	1005	107	36	67	1	500	5195	220	230/1/50	1,34	6	22	12	7/8	1/2
						32	2977	3670	4476	5390	6409	7524	2488	2651	2830	3024		3234	3461																			
						38	2721	3351	4080	4906	5823	6827	2740	2914	3104	3311		3534	3773																			
						43	2506	3077	3737	4484	5314	6221	3005	3188	3388	3605		3839	4091																			
UP-SE2017GS-EAE00	5S3EOS6C3FI	CP: 400V-3ph-50Hz Fan: 230V-1ph-50Hz	6,3	SE2017GS-O	303EO1201AA	25	3815	4698	5725	6888	8178	9583	2576	2759	2960	3181		3421	3682	SEPR	1,98	1277	538	1005	107	36	67	1	500	5195	220	230/1/50	1,34	6	22	12	7/8	1/2
						32	3488	4290	5217	6263	7419	8675	2864	3060	3276	3512		3768	4045																			
						38	3184	3910	4745	5685	6722	7846	3162	3372	3603	3854		4127	4422																			
						43	2928	3585	4338	5184	6117	7129	3480	3702	3945	4210		4497	4807																			
UP-SE2020GS-EAE00	5S3FOS6C3FI	CP: 400V-3ph-50Hz Fan: 230V-1ph-50Hz	6,9	SE2020GS-O	303FO1201AA	25	4416	5425	6591	7903	9346	10904	3006	3229	3476	3748		4045	4369	SEPR	1,95	1277	538	1005	107	36	67	1	500	5195	220	230/1/50	1,34	6	22	12	7/8	1/2
						32	4025	4938	5987	7160	8446	9830	3347	3587	3853	4145		4463	4809																			
						38	3667	4490	5430	6478	7625	8857	3709	3967	4252	4564		4904	5274																			
						43	3370	4109	4952	5891	6916	8016	4098	4372	4674	5004		5364	5754																			

Note: *Subject to modification without prior notification.*

GENERAL DATA & PERFORMANCE

R404A - LBP - SH10K

CONDENSING UNITS				COMPRESSORS		AMBIENT TEMP.	EN13125 - SUBCOOLING 0K - MIDPOINT COOLING CAPACITY (W)						POWER INPUT (W)						ECO DESIGN		DIMENSIONS (mm)			WEIGHT	ACOUSTICS dB (A)		CONDENSER/FAN						LIQUID RECEIVER	CONNECTION DIAMETERS			
CONDENSING UNITS MODELS	CONDENSING UNIT BOM	VOLTAGE SUPPLY (V)	I NOM (A)	COMPRESSOR MODELS	COMPRESSOR BOM	(°C)	-35°C	-30°C	-25°C	-20°C	-15°C	-10°C	-35°C	-30°C	-25°C	-20°C		-15°C	-10°C	Type	Cop/ Seer	W (width)	D (depth)	H (height)	Net (kg)	Sound Press. @10m	Sound power level	Number of fan	Fan diameter (mm)	Airflow (m³/h)	Fan power (W)	Voltage supply (V)	Internal volume (dm³)	dm³	Suction (mm)	Liquid (mm)	Suction (")	Liquid (")
UP-NT2180GK-EAE00	503HAS6C4FI	CP: 230V-1ph-50Hz Fan: 230V-1ph-50Hz	2,4	NT2180GK-A-CSR	923HA0404AF	25	562	729	931	1165	1425	1705	569	619	676	742		821	915	-	-	982	484	600	69	29	60	1	350	1695	67	230/1/50	0,23	1,6	12	6	1/2	1/4
						32	492	640	818	1021	1246	1487	562	627	698	777		865	965																			
						38	421	555	712	891	1087	1298	566	642	721	806		898	1000																			
						43	-	482	623	782	957	1143	-	655	739	826		920	1021																			
UP-NT2192GK-EAE00	503EAS6C4FI	CP: 230V-1ph-50Hz Fan: 230V-1ph-50Hz	2,7	NT2192GK-A-CSR	923EA0404AF	25	607	787	995	1230	1490	1771	585	655	726	801		886	984	-	-	982	484	600	69	29	60	1	350	1695	67	230/1/50	0,23	1,6	12	8	1/2	3/8
						32	527	684	867	1073	1302	1550	592	669	747	831		926	1036																			
						38	451	590	752	935	1139	1360	597	680	766	859		963	1084																			
						43	-	512	657	822	1005	1205	-	688	781	882		995	1127																			
UP-NT2212GK-EAE00	505DAS6C4FI	CP: 230V-1ph-50Hz Fan: 230V-1ph-50Hz	3,7	NT2212GK-A-CSR	925DA0204AF	25	801	1032	1312	1637	2002	2402	715	797	889	990		1104	1229	-	-	982	484	600	69	29	60	1	350	1523	67	230/1/50	0,45	2,3	16	8	1/2	3/8
						32	699	906	1155	1444	1767	2123	722	815	918	1031		1155	1290																			
						38	601	787	1010	1269	1559	1876	730	834	947	1069		1202	1346																			
						43	-	688	890	1123	1385	1672	-	851	972	1102		1242	1393																			
UP-NJX2219GS-EAE00	545ASS6C3FI	CP: 400V-3ph-50Hz Fan: 230V-1ph-50Hz	2,3	NJX2219GS-M	945AS2101AA	25	1214	1575	2010	2516	3086	3714	1036	1166	1306	1457		1623	1803	-	-	1082	490	708	88	34	65	1	400	2673	120	230/1/50	0,71	3,9	16	8	1/2	3/8
						32	1074	1395	1782	2231	2737	3294	1070	1210	1361	1525		1704	1900																			
						38	942	1229	1575	1976	2428	2926	1093	1244	1407	1583		1776	1985																			
						43	825	1084	1397	1759	2167	2615	1107	1268	1442	1630		1834	2057																			
UP-SE2006GK-EAE00	5S3ACS6C4FI	CP: 230V-1ph-50Hz Fan: 230V-1ph-50Hz	5,6	SE2006GK-C	303AC1204AA	25	1300	1627	2017	2469	2984	3561	1123	1188	1260	1340		1429	1526	-	-	1082	490	708	92	33	64	1	400	2673	120	230/1/50	0,71	3,9	18	10	3/4	3/8
						32	1169	1464	1815	2221	2684	3203	1212	1287	1369	1459		1558	1667																			
						38	1040	1305	1620	1986	2403	2872	1328	1409	1497	1594		1700	1816																			
						43	928	1166	1450	1781	2159	2585	1455	1538	1630	1731		1842	1961																			
UP-SE2006GS-EAE00	5S3AOS6C3FI	CP: 400V-3ph-50Hz Fan: 230V-1ph-50Hz	2,4	SE2006GS-O	303AO1201AA	25	1300	1628	2017	2470	2985	3562	1114	1179	1250	1329		1417	1514	-	-	1082	490	708	92	33	64	1	400	2673	120	230/1/50	0,71	3,9	18	10	3/4	3/8
						32	1169	1465	1815	2222	2685	3204	1203	1276	1358	1447		1546	1653																			
						38	1040	1306	1621	1987	2404	2873	1318	1397	1485	1581		1686	1800																			
						43	928	1167	1451	1782	2160	2586	1443	1525	1617	1717		1826	1945																			
UP-SE2008GK-EAE00	5S3BCS6C4FI	CP: 230V-1ph-50Hz Fan: 230V-1ph-50Hz	7,2	SE2008GK-C	303BC1204AA	25	1633	2038	2516	3067	3689	4379	1422	1511	1611	1722		1847	1986	-	-	1082	490	708	92	33	64	1	400	2673	120	230/1/50	0,71	3,9	18	10	3/4	3/8
						32	1460	1823	2250	2742	3297	3914	1547	1649	1762	1888		2027	2179																			
						38	1293	1617	1999	2439	2936	3489	1706	1816	1938	2072		2220	2382																			
						43	1149	1439	1781	2176	2624	3124	1877	1991	2118	2258		2411	2578																			
UP-SE2008GS-EAE00	5S3BOS6C3FI	CP: 400V-3ph-50Hz Fan: 230V-1ph-50Hz	2,7	SE2008GS-O	303BO1201AA	25	1634	2040	2518	3070	3693	4384	1395	1482	1580	1689		1811	1947	-	-	1082	490	708	92	33	64	1	400	2673	120	230/1/50	0,71	3,9	18	10	3/4	3/8
						32	1462	1825	2253	2746	3302	3919	1517	1617	1728	1851		1986	2136																			
						38	1295	1620	2002	2443	2941	3495	1672	1780	1899	2031		2175	2334																			
						43	1151	1442	1785	2181	2630	3131	1839	1951	2075	2212		2362	2525																			
UP-SE2010GK-EAE00	5S3CCS6C4FI	CP: 230V-1ph-50Hz Fan: 230V-1ph-50Hz	8,4	SE2010GK-C	303CC1204AA	25	1892	2356	2900	3523	4220	4987	1655	1764	1888	2027		2183	2358	-	-	1082	490	708	92	33	64	1	400	2673	120	230/1/50	0,71	3,9	18	10	3/4	3/8
						32	1685	2098	2582	3134	3754	4436	1811	1936	2076	2232		2405	2596																			
						38	1486	1854	2284	2776	3328	3936	2005	2140	2290	2457		2641	2842																			
						43	1318	1645	2028	2468	2962	3510	2214	2354	2510	2683		2873	3080																			
UP-SE2010GS-EAE00	5S3COS6C3FI	CP: 400V-3ph-50Hz Fan: 230V-1ph-50Hz	4,3	SE2010GS-O	303CO1201AA	25	1894	2358	2903	3527	4226	4995	1618	1725	1846	1981		2134	2304	-	-	1082	490	708	92	33	64	1	400	2673	120	230/1/50	0,71	3,9	18	10	3/4	3/8
						32	1687	2101	2586	3140	3761	4444	1770	1892	2028	2180		2349	2535																			
						38	1489	1858	2289	2782	3336	3947	1959	2090	2237	2399		2578	2775																			
						43	1321	1649	2034	2475	2971	3521	2162	2298	2451	2619		2804	3006																			
UP-SE2012GS-EAE00	5S3GOS6C3FI	CP: 400V-3ph-50Hz Fan: 230V-1ph-50Hz	5,4	SE2012GS-O	303GO1201AA	25	2529	3167	3925	4805	5808	6931	2120	2244	2380	2532		2699	2884	-	-	1277	538	1005	107	36	67	1	500	5195	220	230/1/50	1,34	6	22	12	7/8	1/2
						32	2276	2851	3533	4324	5225	6236	2289	2430	2586	2757		2944	3150																			
						38	2025	2542	3155	3867	4680	5593	2509	2660	2828	3012		3213	3431																			
						43	1807	2272	2825	3469	4206	5036	2747	2905	3080	3271		3479	3706																			
UP-SE2014GS-EAE00	5S3DOS6C3FI	CP: 400V-3ph-50Hz Fan: 230V-1ph-50Hz	5,2	SE2014GS-O	303DO1201AA	25	2931	3663	4532	5535	6673	7941	2252	2388	2539	2707		2894	3102	-	-	1277	538	1005	107	36	67	1	500	5195	220	230/1/50	1,34	6	22	12	7/8	1/2
						32	2631	3290	4069	4969	5989	7127	2439	2593	2765	2955		3164	3393																			
						38	2338	2930	3629	4437	5355	6381	2677	2844	3029	3232		3455	3699																			
						43	2085	2616	3246	3975	4806	5737	2935	3109	3301	3513		3744	3996																			
UP-SE2017GS-EAE00	5S3EOS6C3FI	CP: 400V-3ph-50Hz Fan: 230V-1ph-50Hz	6,3	SE2017GS-O	303EO1201AA	25	3438	4288	5290	6441	7737	9170	2574	2737	2920	3125		3355	3612	-	-	1277	538	1005	107	36	67	1	500	5195	220	230/1/50	1,34	6	22	12	7/8	1/2
						32	3076	3837	4732	5760	6917	8198	2800	2986	3194	3425		3680	3961																			
						38	2726	3407	4207	5127	6164	7315	3085	3286	3509	3756		4027	4325																			
						43	2426	3036	3753	4581	5516	6557	3391	3600	3832	4088		4369	4676																			
UP-SE2020GS-EAE00	5S3FOS6C3FI	CP: 400V-3ph-50Hz Fan: 230V-1ph-50Hz	6,9	SE2020GS-O	303FO1201AA	25	3973	4943	6079	7375	8822	10410	2985	3185	3411	3666		3953	4275	-	-	1277	538	1005	107	36	67	1	500	5195	220	230/1/50	1,34	6	22	12	7/8	1/2
						32	3540	4405	5414	6566	7852	9265	3265	3492	3748	4033		4350	4701																			
						38	3128	3897	4796	5822	6970	8234	3611	3856	4131	4435		4771	5140																			
						43	2777	3463	4266	5184	6216	7354	3981	4237	4521	4836		5183	5562																			

Note: *Subject to modification without prior notification.*

EXTERNAL VIEWS

MODEL HOUSING 1

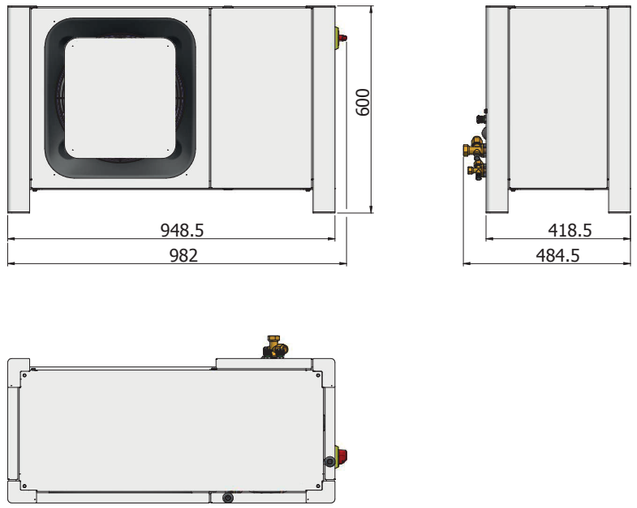

MODEL HOUSING 3

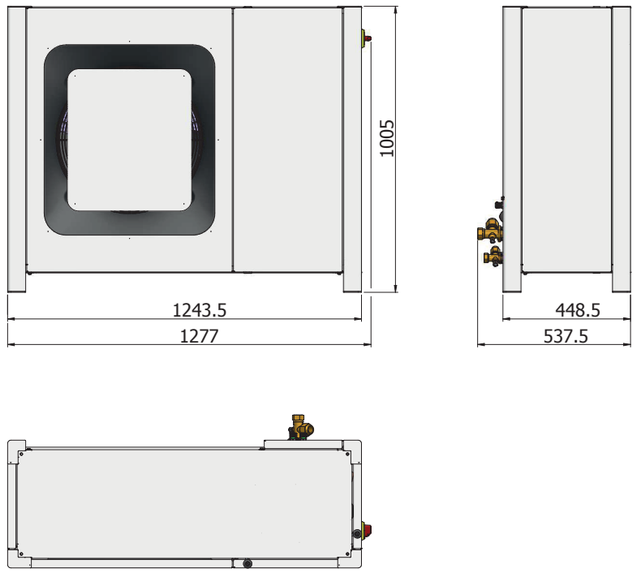

MODEL HOUSING 2

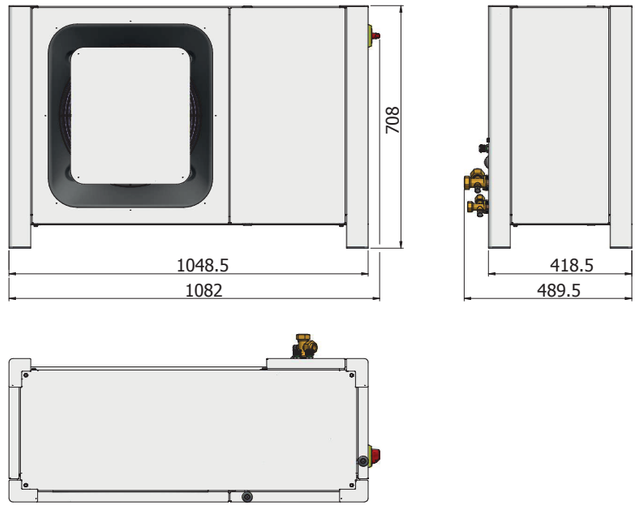

STACKABILITY OPTIONS

DIFFERENT HOUSING SIZES

Different housing sizes with complementary bracket

CONFIGURATIONS	ACCESSORY CODE
Housing 1 to Housing 2	1996761
Housing 1 to Housing 3	1996762
Housing 2 to Housing 3	

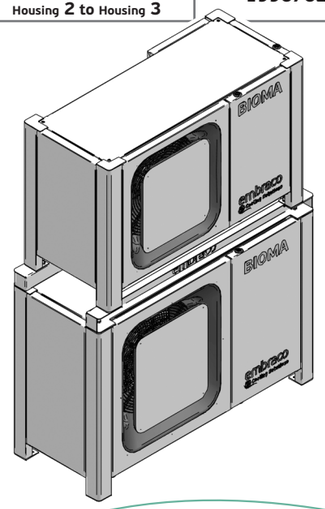

SAME HOUSING SIZES

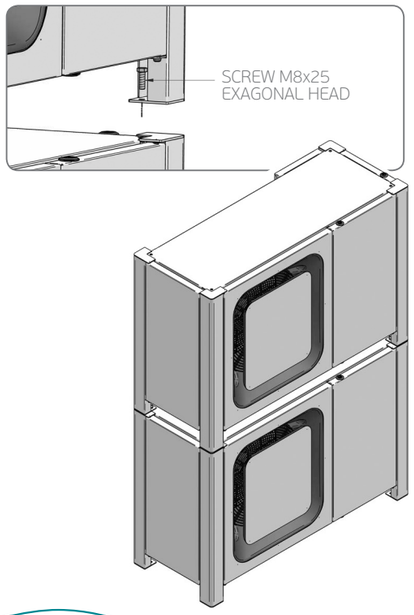

WIRING DIAGRAMS

Hermetic reciprocating compressors - 230v 1~ 50Hz

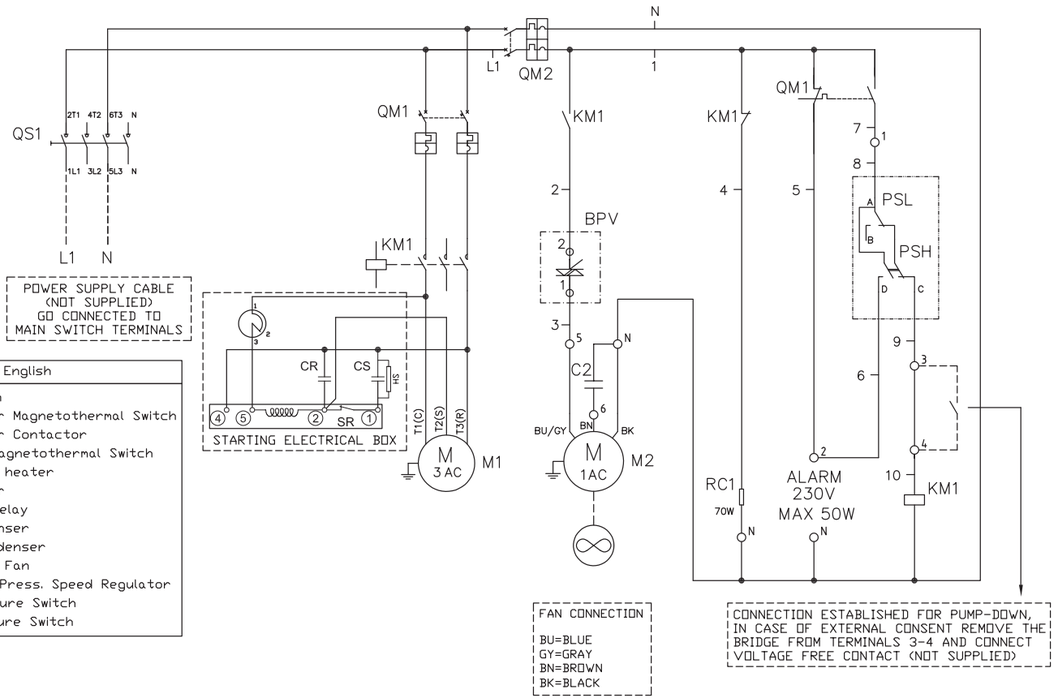

	English
QS1	Main Switch
QM1	Compressor Magnetothermal Switch
KM1	Compressor Contactor
QM2	Auxiliary Magnetothermal Switch
RC1	Crankcase heater
M1	Compressor
SR	Starting Relay
CR	Run Condenser
CS	Start Condenser
M2	Condenser Fan
BPV	Cond. Fan Press. Speed Regulator
PSH	High Pressure Switch
PSL	Low Pressure Switch

Hermetic reciprocating compressors - 400v 3~ 50Hz

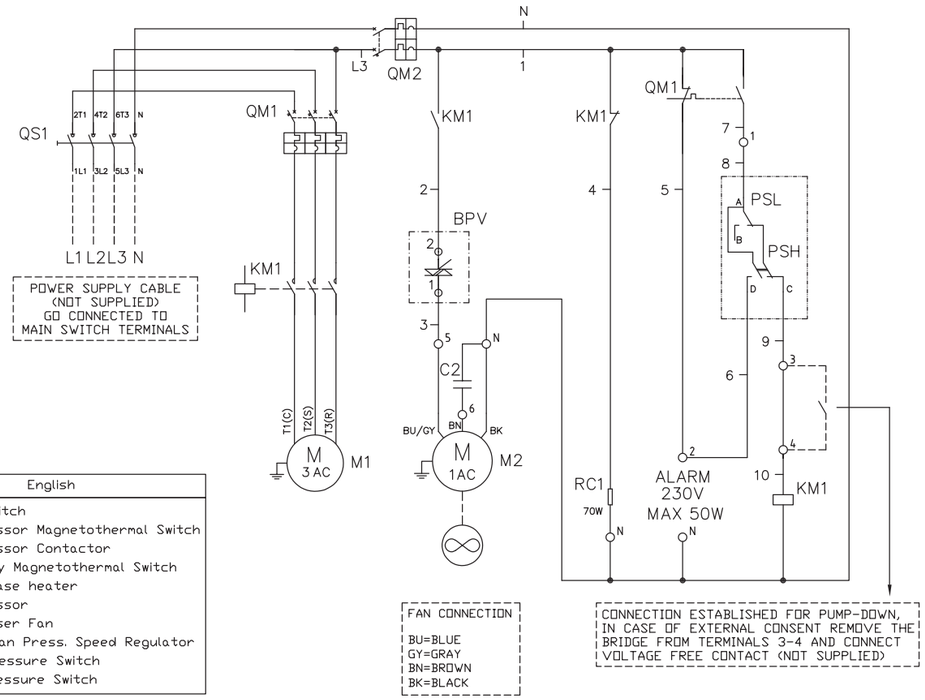

	English
QS1	Main Switch
QM1	Compressor Magnetothermal Switch
KM1	Compressor Contactor
QM2	Auxiliary Magnetothermal Switch
RC1	Crankcase heater
M1	Compressor
M2	Condenser Fan
BPV	Cond. Fan Press. Speed Regulator
PSH	High Pressure Switch
PSL	Low Pressure Switch

WIRING DIAGRAMS

Scroll compressors - 220v 1~ 50Hz

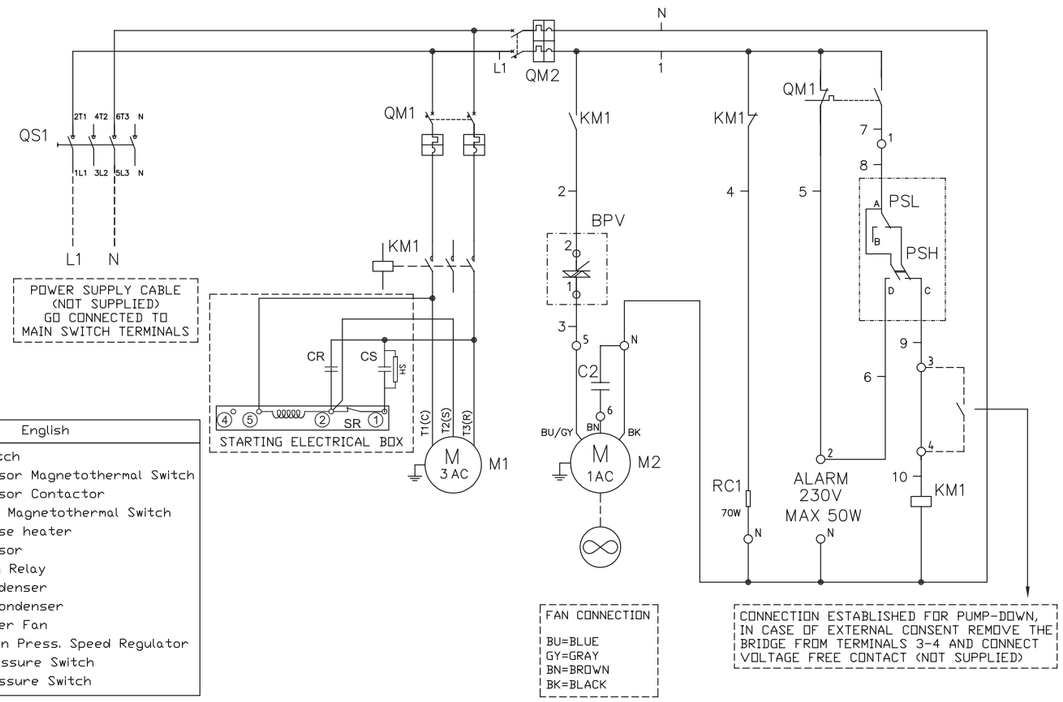

	English
QS1	Main Switch
QM1	Compressor Magnetothermal Switch
KM1	Compressor Contactor
QM2	Auxiliary Magnetothermal Switch
RC1	Crankcase heater
M1	Compressor
SR	Starting Relay
CR	Run Condenser
CS	Start Condenser
M2	Condenser Fan
BPV	Cond. Fan Press. Speed Regulator
PSH	High Pressure Switch
PSL	Low Pressure Switch

Scroll compressors - 400v 3~ 50Hz

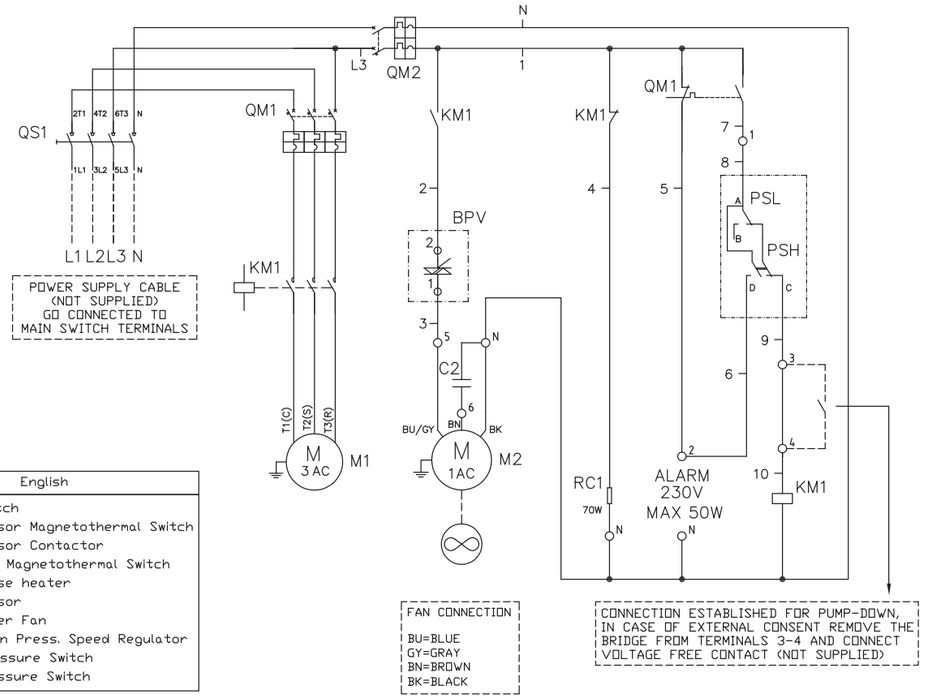

	English
QS1	Main Switch
QM1	Compressor Magnetothermal Switch
KM1	Compressor Contactor
QM2	Auxiliary Magnetothermal Switch
RC1	Crankcase heater
M1	Compressor
M2	Condenser Fan
BPV	Cond. Fan Press. Speed Regulator
PSH	High Pressure Switch
PSL	Low Pressure Switch

FIND DIGITAL CATALOGUE, CROSS REFERENCE, SELECTION SOFTWARE, TECHNICAL RESOURCES AND MUCH MORE IN OUR:

NEW PRODUCT SELECTOR

PRODUCT SELECTOR
embraco

http://products.embraco.com

DIGITAL TOOLS

DOWNLOAD THE APP

embraco toolbox

... AVAILABLE IN 14 LANGUAGES!

- CROSS-REFERENCE
- PRODUCT CATALOGUE
- DISTRIBUTOR LOCATOR
- UNIT CONVERTER
- REFRIGERANT SLIDER
- REFRIGERATION CLUB
- TROUBLESHOOTING

Download on the App Store

GET IT ON Google Play

AND BECOME PART OF OUR REFRIGERATION CLUB!

REFRIGERATION CLUB embraco

REFRIGERATION CLUB
embraco

www.embraco.com

GLOBAL PRESENCE

embraco

PRODUCT SELECTOR

REFRIGERATION CLUB

Subject to alteration without previous notice - Code CBE001EN - Date: May 2019 - Version 01