Catalog

BIOMA+

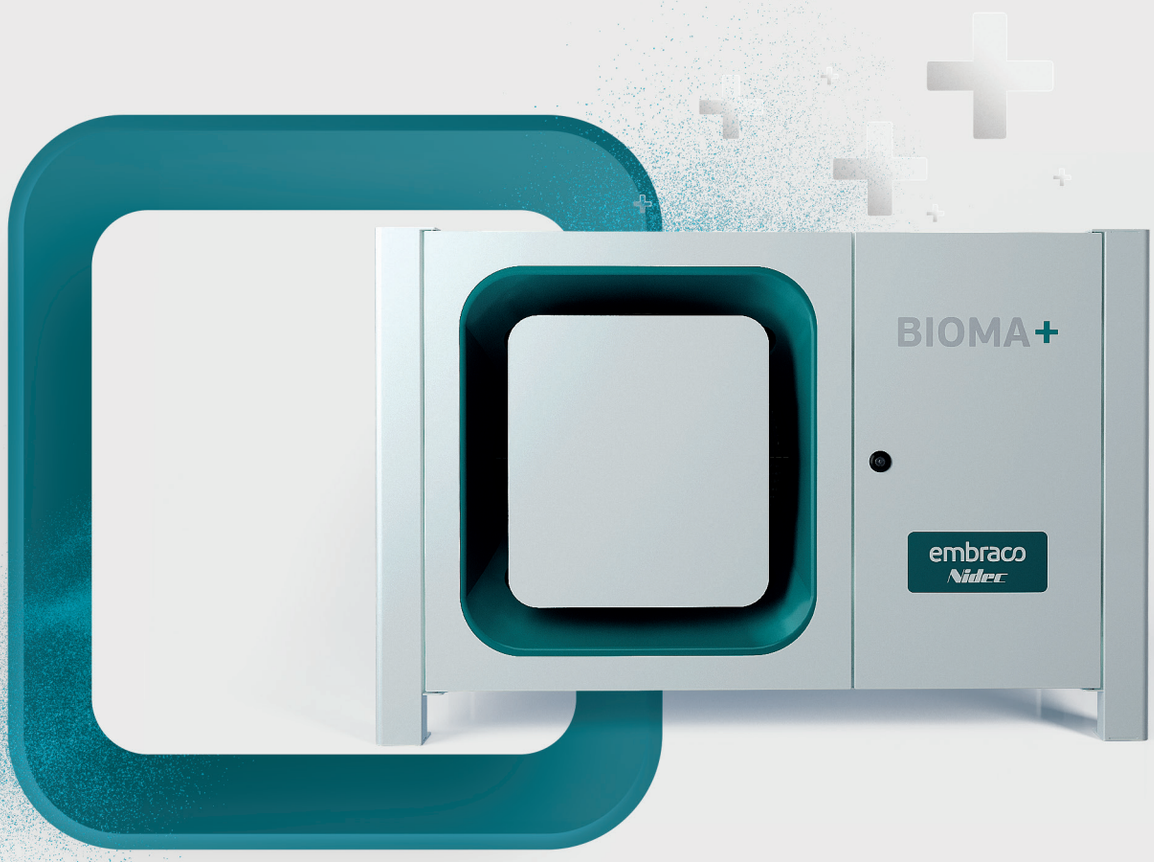

The quietest condensing unit of the range, now with A2L available

think ahead

embraco
Nidec

Table of Contents

04 About Nidec Global Appliance

05 Digital Tools

06 Coldesign

06 About Bioma+

- **08** Bioma+ Overview
- **10** Main Features Details
- **11** Model Range
- **12** Nomenclature

14 General Overview

- **15** General Overview of the Refrigerant Compatibility
- **16** Technical Data

20 Performance data MBP Condensing Units

38 Performance data LBP Condensing Units

46 Operational Limits

47 External Views

49 Stackability Options and Accessories

50 Packaging Data

51 Wiring Diagrams

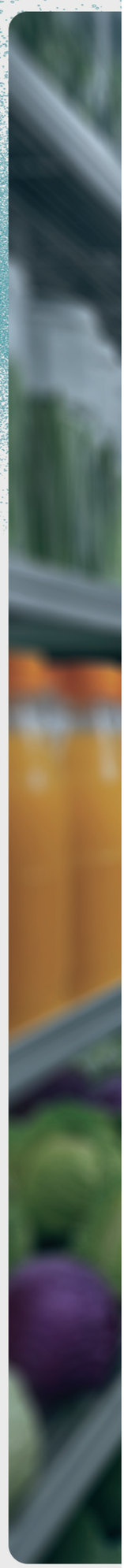



We are Nidec Global Appliance

A global partner for home and commercial refrigeration industries

About Nidec Global Appliance
With over 13,000 employees, 17 manufacturing units, and 5 business offices across 9 countries, Nidec Global Appliance manufactures and commercializes solutions for commercial and residential applications. Its portfolio includes Embraco and U.S. MOTORS® solutions for refrigeration, heating, ventilation, and air conditioning, Nidec motors for residential washing machines, dryers, and dishwashers, and FIR motors and pumps for food service equipment, commercial washing machines, and medical applications. Nidec Global Appliance is a Platform of ACIM (Appliance, Commercial, and Industrial Motors), a Business Unit of Nidec Corporation. For further information, access the company profile.

embraco
Nidec

Over 50 years raising the bar of refrigeration

think ahead

About Embraco
Embraco is a global brand of solutions for refrigeration, heating, and air-conditioning, counting on a broad, efficient, and competitive portfolio of compressors (both hermetic piston and scroll), condensing units, monoblocks, and electronic components for applications in the residential, food service, food retail, merchandisers, medical, agriculture, and industrial sectors. Since 1971, its solutions have been differentiated by innovation that exceeds customers' most challenging expectations. Embraco is part of Nidec Global Appliance. Further information at www.embraco.com



Home Appliances
Products for residential applications for HVAC&R.



Commercial Appliances
Compressors and cooling solutions for commercial applications for food retail, kitchens, industrial and agriculture end use.

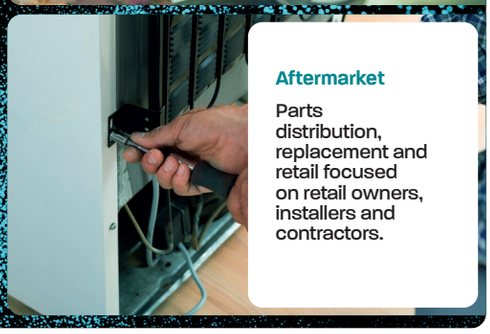

Aftermarket
Parts distribution, replacement and retail focused on retail owners, installers and contractors.

embraco
Nidec

Digital Tools

embraco toolboxapp

Available on App Store

Available on Google Play

Available in all countries and in more than 10 languages, the Embraco Tool Box has 7 functionalities which help refrigeration professionals on their daily routine. **Download the App now for Android and iOS systems.**

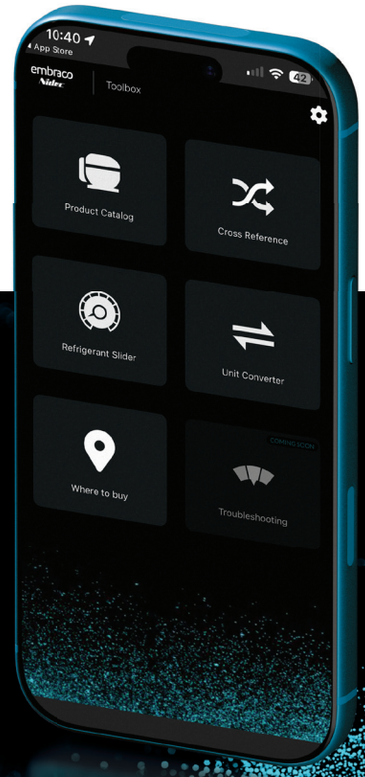

Find inside:

- Cross-reference
- Product catalogue
- Distributor locator
- Unit converter
- Refrigerant slider
- Refrigeration club
- Troubleshooting

PSS

Product Software Selector

Choose the best solution for your business at Embraco's official portfolio platform. **Access: products.embraco.com**

Embraco website in 11 languages
www.embraco.com

embraco Nidec



Embraco Coldesign

Quick and precise refrigeration load for your cold room.

Embraco, a global provider of refrigeration technology for the complete domestic and commercial cold chain, and a brand of the **Nidec Global Appliance** portfolio, has made available for the European refrigeration market a unique digital service, the **Coldesign software.**

Using specific algorithms, it calculates the refrigeration load for a cold room and defines what is the most suitable Embraco condensing unit for the project.

The Coldesign software is part of Embraco's digital services. The innovative tool is focused on wholesalers of refrigeration equipment, installers and contractors, aiming to reduce their workload and speeding up the process of building and equipping cold rooms.

It also provides a technical and educational content platform for refrigeration professionals, **the Refrigeration Club.**

Discover more about **Coldesign**



About Bioma+

Bioma+ represents a new level for our housed condensing units, building on the core strengths of easy installation, simple maintenance, compactness and stackability, all in a minimalist stylish design. We have integrated key technical advancements and enhanced safety features to meet the latest trends of commercial refrigeration.

This unit is engineered for **outdoor applications** in various settings, including **petrol stations, restaurants, fast-food services, and convenience stores.** Its innovative design makes it significantly quieter than conventional models, a perfect fit for urban areas with strict sound regulations.

BIOMA+ is engineered for dual compatibility, supporting both A2L and A1 refrigerants.

- The dual compatibility helps manufacturers optimize product portfolios and make inventory management easier.
- A2L condensing units share similar dimensions and systems with existing A1 models, which simplifies the transition.
- Available with the complete range of Embraco hermetic and scroll compressors.

This is more than an update-it's a proof of how at Embraco Nidec we always **think ahead!**



*The images shown are for illustration purposes only and may not be an exact representation of the product.

Bioma+ Overview

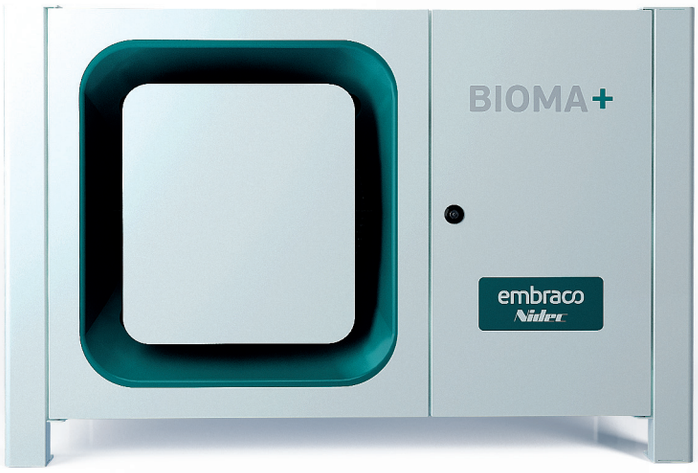

Silent: with a robust design that absorbs vibrations, models range from 28 to 36 dB(A)

Robust design: Stackability and longitudinal airflow

Easy access to all internal components

Compressors compatible **with several A1 and A2L refrigerants**

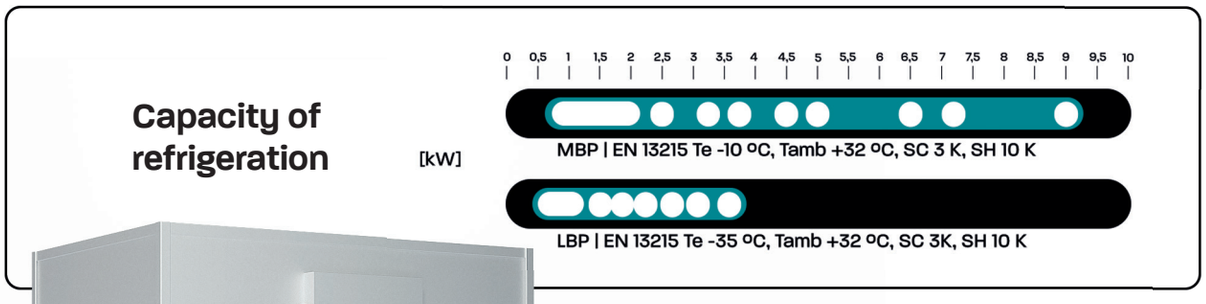



Main application:
Cold Room

Compatible with:

R452A | R448A | R449A
NEW A2L:
R454C and R455A

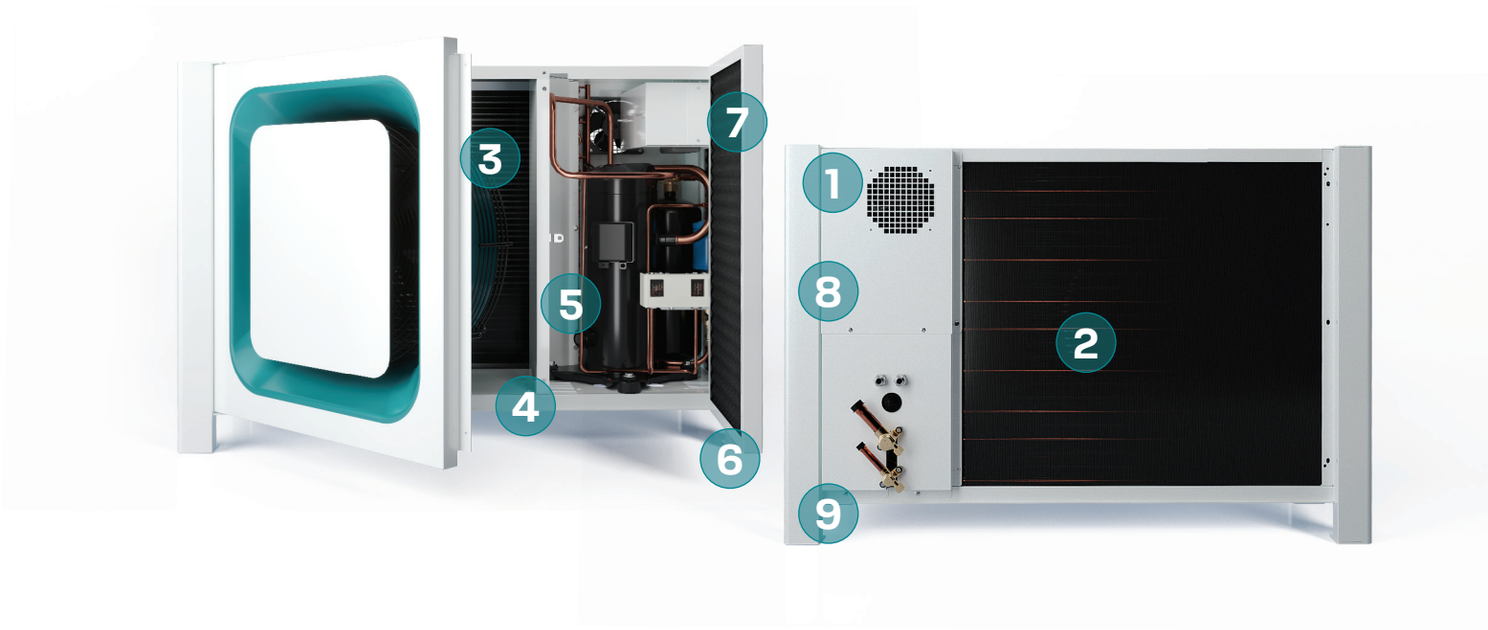

1. Safety
Bioma+ features a redesigned electrical box and extra fan for safe use with A2L refrigerants.

2. Condenser
Fin-and-tube design resists field conditions and simplifies maintenance with integrated fan access door.

3. Variable-speed fan
Adjusts the speed according to the condensation pressure, reducing noise and energy consumption

4. Pressure switches
Dual adjustable switch with automatic reset for high and low pressure.

5. Compressor
Reciprocating or scroll models with crankcase heater. Wide capacity and temperature range; supports liquid injection.

6. 3 doors with lock
New three-doors design with new central access for faster, easier entry.

7. Foam insulation
Five-side insulation cuts noise and boosts performance.

8. Additional pressure relief valve
Ready for EN 378-2 compliant valve (optional).

9. Brazed connections
New brazed service valves for safer A2L handling.

Main Features Details



Stackability

Each housing of Bioma+ is stackable, allowing the combination of up to 2 units. Different housings (like H2 on H3) are stackable by mean of a connection kit. This feature allows to have LBP and MBP service on the same footprint, or to increase the total available capacity, or to provide redundancy.

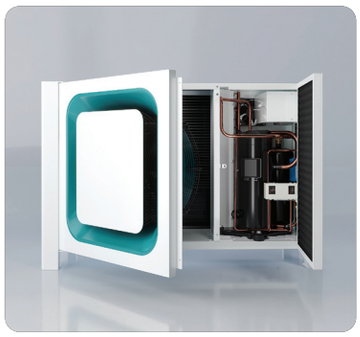

Accessibility

Bioma+ is equipped with 3 doors with unleash full accessibility to all the refrigeration and electrical parts. The right side two doors can be opened through quarter turn of a key, without using tools. The fan is hinged to the door, allowing complete and quick cleaning of the condenser.

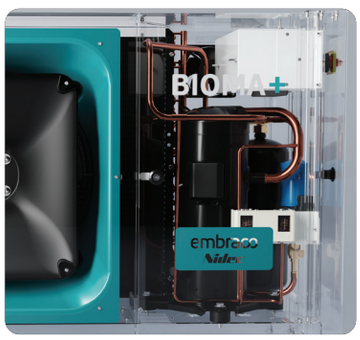

Service

Bioma+ is designed for serviceability. In fact, many maintenance operations have been made easy, with simple yet clever solutions. As an example, the refrigerant dryer has an additional rotalock valve, which reduces the recharge time from 2 hours to just 45 minutes.



Optimized Air Flow & CFD

The condenser is equipped with a CFD engineered air diffuser, which hides a variable speed fan and insulation foam, making Bioma+ the quietest condensing unit available on the market (28 to 36 dB(A) depending on the housing).

Model Range

Specifications by dimensions



Housing 1
(All models)



Housing 2
(All models)



Housing 3
(All models)

Dimensions WxDxH [mm]	974 x 474 x 600	1075 x 482 x 708	1277 x 538 x 1005
Weight [kg]	67 up to 76	88 up to 92	up to 107
Compressor	NE / NT / NJ series	ERF / ELF / NJ series	ERF / ELF series
Receiver volume [L]	1,6 to 2,3	3,9	6
Condensation	Air	Air	Air
Condenser type	5 mm finned tube	5 mm finned tube	5 mm finned tube
Sound pressure level [dB(A)] (3)	28 to 30	33	36
Refrigerant	R452A, R448A, R449A, R454C, R455A	R452A, R448A, R449A, R454C, R455A	R452A, R448A, R449A, R454C, R455A
PED Category	Cat.II	Cat.II	Cat.II
Rated capacity MBP-LBP [kW] (1) (3)	0,8 to 2,5 | up to 0,7	3,5 to 5,2 | 1,0 to 1,8	6,3 to 9,0 | 2,3 to 3,8
Rated Power MBP-LBP [kW] (1) (3)	0,5 to 1,5 | up to 0,7	1,8 to 2,3 | 1,0 to 1,6	2,9 to 3,7 | 1,9 to 3,2
Rated COP MBP-LBP (2) (3)	1,6 to 2,1 | up to 1,1	2,0 to 2,3 | 1,1 to 1,3	N/A
Rated SEPR MBP-LBP (2) (3)	N/A	3,3 to 3,4 | 1,8 to 1,9	3,5 to 3,7 | 1,9 to 2,1
Power supply	230 V / 1 / 50 Hz 400 V / 3 / 50 Hz	230 V / 1 / 50 Hz 400 V / 3 / 50 Hz	400 V / 3 / 50 Hz

(1) Performance condition:
MT | EN 13215 SH 10 K, Te -10 °C, Tamb +32 °C - | LT | EN 13215 SH 10 K, Te -35 °C, Tamb +32 °C

(2) Performance condition:
MT | EN 13215 RGT20, Te -10 °C, Tamb +32 °C - | LT | EN 13215 RGT20, Te -35 °C, Tamb +32 °C.

(3) Performance measured with R455A for MBP and R452A for LBP. Performances may differ for other refrigerants

(4) SPL measured according to ISO EN 3744:2010.

Nomenclature

Reciprocating

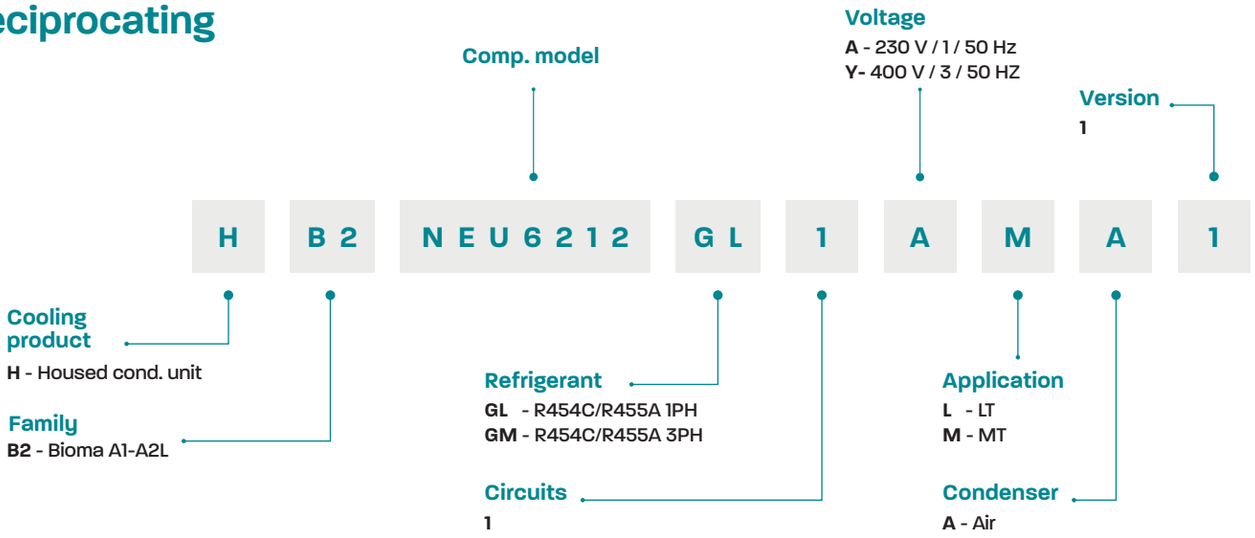

Scroll

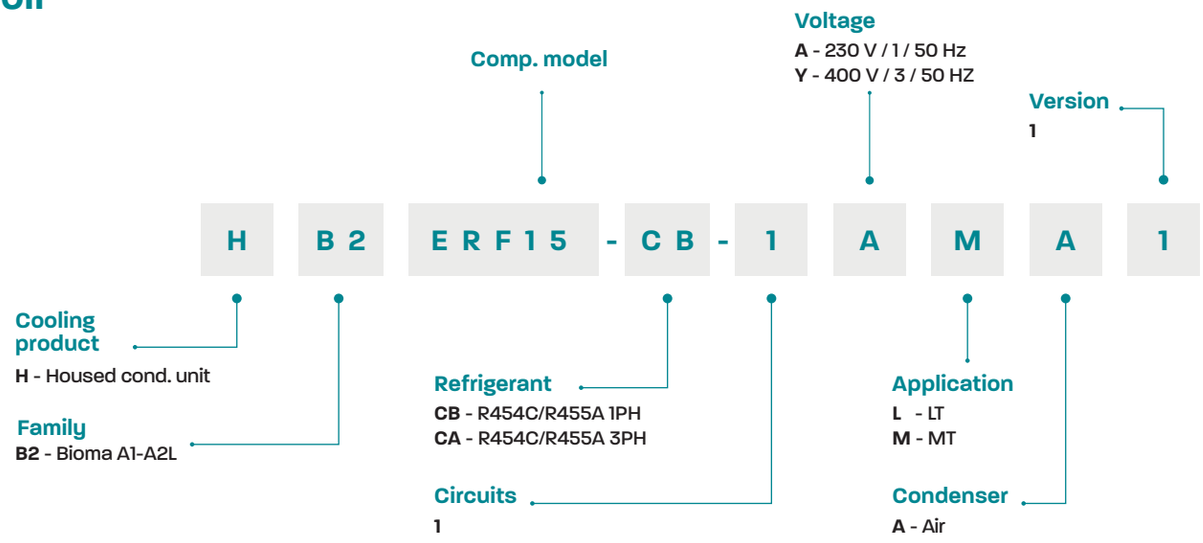

General

Overview

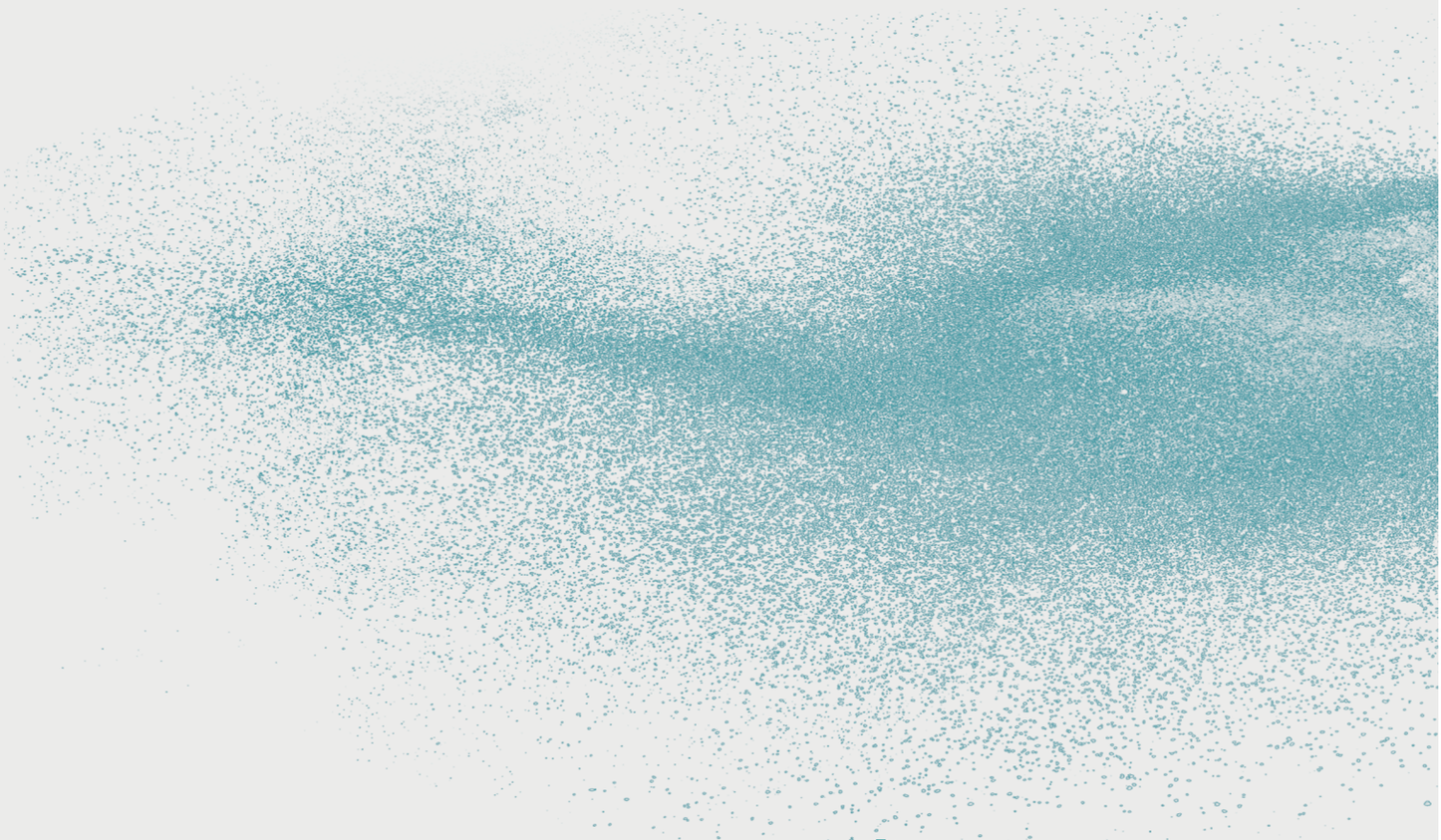

think ahead

embraco

Nidec

General Overview of the Refrigerant Compatibility

Application	Supply	Housing	Model	R452A	R448A / R449A	R454C	R455A
MBP R448A/R449A/R452A/ R454C/R455A	1~	Housing 1	HB2NEU6212GL1AMA1				
			HB2NEU6215GL1AMA1				
			HB2NT6222GL-1AMA1				
			HB2NT6224GL-1AMA1				
			HB2NT6226GL-1AMA1				
			HB2NJ9232GL-1AMA1				
			HB2NTU6238GL1AMA1				
		Housing 2	HB2ERF15-CB-1AMA1				
			HB2ERF19-CB-1AMA1				
			HB2ERF21-CB-1AMA1				
	3~	Housing 1	HB2NJ9232GM-1YMA1				
			HB2NJ9238GM-1YMA1				
		Housing 2	HB2NJX6250GM1YMA1				
			HB2ERF15-CA-1YMA1				
			HB2ERF19-CA-1YMA1				
			HB2ERF21-CA-1YMA1				
		Housing 3	HB2ERF26-CA-1YMA1				
			HB2ERF30-CA-1YMA1				
			HB2ERF37-CA-1YMA1				

Application	Supply	Housing	Model	R452A	R448A / R449A	R454C	R455A
LBP R448A/R449A/R452A/ R454C/R455A	1~	Housing 1	HB2NT2212GL-1ALA1				
		Housing 2	HB2ELF07-CB-1ALA1				
			HB2ELF08-CB-1ALA1				
			HB2ELF09-CB-1ALA1				
	3~	Housing 2	HB2NJX2219GM1YLA1				
			HB2ELF07-CA-1YLA1				
			HB2ELF08-CA-1YLA1				
			HB2ELF09-CA-1YLA1				
		Housing 3	HB2ELF12-CA-1YLA1				
			HB2ELF13-CA-1YLA1				
			HB2ELF17-CA-1YLA1				
			HB2ELF20-CA-1YLA1				

Approved Not compatible

Technical Data

MBP

Condensing units	Electrical Data		Dimensions					Acoustics*		Condenser/Fan						Liqui. rec.	Connection diameters	
CDU Model	Voltage supply [V]	MCC comp + fan Max. Contin. Current [A]	W (width) [mm]	D (Depth) [mm]	H (height) [mm]	External view	Net Weight [kg]	Sound Press. @10m [dB(A)]	Sound power level [dB(A)]	Nber of fan (s)	Fan diamet. [mm]	Airflow [m3/h]	Fan power [W]	Voltage supply [V]	Internal volume [dm3]	[dm3]	Suction [*]	Liquid [**]
HB2NEU6212GL1AMA1	CP: 230V-1ph-50Hz Fan: 230V-1ph-50Hz	5.3	974	467	600	Housing 1	67	28	59	1	350	1695	67	230/1/50	0.23	1.6	3/8	1/4
HB2NEU6215GL1AMA1	CP: 230V-1ph-50Hz Fan: 230V-1ph-50Hz	6.7	974	467	600	Housing 1	67	28	59	1	350	1695	67	230/1/50	0.23	1.6	3/8	1/4
HB2NT6222GL-1AMA1	CP: 230V-1ph-50Hz Fan: 230V-1ph-50Hz	8.5	974	467	600	Housing 1	69	29	60	1	350	1695	67	230/1/50	0.23	1.6	1/2	1/4
HB2NT6224GL-1AMA1	CP: 230V-1ph-50Hz Fan: 230V-1ph-50Hz	9	974	467	600	Housing 1	69	29	60	1	350	1523	67	230/1/50	0.45	2.3	1/2	1/4
HB2NT6226GL-1AMA1	CP: 230V-1ph-50Hz Fan: 230V-1ph-50Hz	10.3	974	467	600	Housing 1	69	29	60	1	350	1523	67	230/1/50	0.45	2.3	1/2	1/4
HB2NJ9232GL-1AMA1	CP: 230V-1ph-50Hz Fan: 230V-1ph-50Hz	10.3	974	474	600	Housing 1	76	30	61	1	350	1523	67	230/1/50	0.45	2.3	5/8	3/8
HB2NJ9232GM-1YMA1	CP: 400V-3ph-50Hz Fan: 230V-1ph-50Hz	4.2	974	474	600	Housing 1	76	30	61	1	350	1523	67	230/1/50	0.45	2.3	5/8	3/8
HB2NTU6238GL1AMA1	CP: 230V-1ph-50Hz Fan: 230V-1ph-50Hz	16.7	974	474	600	Housing 1	76	30	61	1	350	1523	67	230/1/50	0.45	2.3	5/8	3/8
HB2NJ9238GM-1YMA1	CP: 400V-3ph-50Hz Fan: 230V-1ph-50Hz	4.4	974	474	600	Housing 1	76	30	61	1	350	1523	67	230/1/50	0.45	2.3	5/8	3/8
HB2NJX6250GM1YMA1	CP: 400V-3ph-50Hz Fan: 230V-1ph-50Hz	6	1075	474	708	Housing 2	88	34	65	1	400	2673	120	230/1/50	0.71	3.9	5/8	3/8
HB2ERF15-CB-1AMA1	CP: 230V-1ph-50Hz Fan: 230V-1ph-50Hz	14.3	1075	482	708	Housing 2	92	33	64	1	400	2673	120	230/1/50	0.71	3.9	5/8	1/2
HB2ERF15-CA-1YMA1	CP: 400V-3ph-50Hz Fan: 230V-1ph-50Hz	5.7	1075	482	708	Housing 2	92	33	64	1	400	2673	120	230/1/50	0.71	3.9	3/4	1/2
HB2ERF19-CB-1AMA1	CP: 230V-1ph-50Hz Fan: 230V-1ph-50Hz	16.6	1075	482	708	Housing 2	92	33	64	1	400	2545	120	230/1/50	0.91	3.9	3/4	1/2
HB2ERF19-CA-1YMA1	CP: 400V-3ph-50Hz Fan: 230V-1ph-50Hz	6.3	1075	482	708	Housing 2	92	33	64	1	400	2545	120	230/1/50	0.91	3.9	3/4	1/2
HB2ERF21-CB-1AMA1	CP: 230V-1ph-50Hz Fan: 230V-1ph-50Hz	18.4	1075	482	708	Housing 2	92	33	64	1	400	2545	120	230/1/50	0.91	3.9	3/4	1/2
HB2ERF21-CA-1YMA1	CP: 400V-3ph-50Hz Fan: 230V-1ph-50Hz	7	1075	482	708	Housing 2	92	33	64	1	400	2545	120	230/1/50	0.91	3.9	3/4	1/2
HB2ERF26-CA-1YMA1	CP: 400V-3ph-50Hz Fan: 230V-1ph-50Hz	8.5	1269	519	1005	Housing 3	107	36	67	1	500	5195	220	230/1/50	1.34	6	7/8	5/8
HB2ERF30-CA-1YMA1	CP: 400V-3ph-50Hz Fan: 230V-1ph-50Hz	9.9	1269	519	1005	Housing 3	107	36	67	1	500	5195	220	230/1/50	1.34	6	7/8	5/8
HB2ERF37-CA-1YMA1	CP: 400V-3ph-50Hz Fan: 230V-1ph-50Hz	11.7	1269	519	1005	Housing 3	107	36	67	1	500	4739	220	230/1/50	2.23	6	7/8	5/8

Technical Data

LBP

Condensing units	Electrical Data		Dimensions					Acoustics*		Condenser/Fan						Liqui. rec.	Connection diam-eters	
CDU Model	Voltage supply [V]	MCC comp + fan Max. Contin. Current [A]	W (width) [mm]	D (Depth) [mm]	H (height) [mm]	External view	Net Weight [kg]	Sound Press. @10m [dB(A)]	Sound power level [dB(A)]	Nber of fan (s)	Fan diamet. [mm]	Airflow [m3/h]	Fan power [W]	Voltage supply [V]	Internal volume [dm3]	[dm3]	Suction ["]	Liquid ["]
HB2NT2212GL-1ALA1	CP: 230V-1ph-50Hz Fan: 230V-1ph-50Hz	9.6	974	467	600	Housing 1	69	29	60	1	350	1523	67	230/1/50	0.45	2.3	1/2	1/4"
HB2NJX2219GM1YLA1	CP: 400V-3ph-50Hz Fan: 230V-1ph-50Hz	4.4	1075	474	708	Housing 2	88	34	65	1	400	2673	120	230/1/50	0.71	3.9	5/8"	3/8
HB2ELF07-CB-1ALA1	CP: 230V-1ph-50Hz Fan: 230V-1ph-50Hz	11.4	1075	482	708	Housing 2	92	33	64	1	400	2673	120	230/1/50	0.71	3.9	3/4	3/8
HB2ELF07-CA-1YLA1	CP: 400V-3ph-50Hz Fan: 230V-1ph-50Hz	4.7	1075	482	708	Housing 2	92	33	64	1	400	2673	120	230/1/50	0.71	3.9	3/4	3/8
HB2ELF08-CB-1ALA1	CP: 230V-1ph-50Hz Fan: 230V-1ph-50Hz	14.3	1075	482	708	Housing 2	92	33	64	1	400	2673	120	230/1/50	0.71	3.9	3/4	3/8
HB2ELF08-CA-1YLA1	CP: 400V-3ph-50Hz Fan: 230V-1ph-50Hz	5.8	1075	482	708	Housing 2	92	33	64	1	400	2673	120	230/1/50	0.71	3.9	3/4	3/8
HB2ELF09-CB-1ALA1	CP: 230V-1ph-50Hz Fan: 230V-1ph-50Hz	16.7	1075	482	708	Housing 2	92	33	64	1	400	2673	120	230/1/50	0.71	3.9	3/4	3/8
HB2ELF09-CA-1YLA1	CP: 400V-3ph-50Hz Fan: 230V-1ph-50Hz	6.7	1075	482	708	Housing 2	92	33	64	1	400	2673	120	230/1/50	0.71	3.9	3/4	3/8
HB2ELF12-CA-1YLA1	CP: 400V-3ph-50Hz Fan: 230V-1ph-50Hz	8.5	1269	519	1005	Housing 3	107	36	66.8	1	500	5195	220	230/1/50	1.34	6	7/8	1/2
HB2ELF13-CA-1YLA1	CP: 400V-3ph-50Hz Fan: 230V-1ph-50Hz	9.4	1269	519	1005	Housing 3	107	36	66.8	1	500	5195	220	230/1/50	1.34	6	7/8	1/2
HB2ELF17-CA-1YLA1	CP: 400V-3ph-50Hz Fan: 230V-1ph-50Hz	10.7	1269	519	1005	Housing 3	107	36	66.8	1	500	5195	220	230/1/50	1.34	6	7/8	1/2
HB2ELF20-CA-1YLA1	CP: 400V-3ph-50Hz Fan: 230V-1ph-50Hz	12.3	1269	519	1005	Housing 3	107	36	67	1	500	5195	220	230/1/50	1.34	6	7/8	1/2

Performance data

MBP Condensing Units



think ahead

embraco

Nidec



MBP R455A SH10K

Condensing units			Amb. temp.	Cooling capacity (W) [1]*							
CDU Models	Voltage supply (V)	MCC comp + fan Max. Contin. Current [A]	(°C)	-25°C	-20°C	-15°C	-10°C	-5°C	0°C	+5°C	+10°C
HB2NEU6212GL1AMA1	CP: 230V-1ph-50Hz Fan: 230V-1ph-50Hz	5.3	25	-	558	714	894	1110	1338	1565	1825
			32	-	507	649	813	1010	1218	1425	1663
			38	-	456	586	736	913	1105	1297	1515
			43	-	410	529	667	832	1008	1184	1385
HB2NEU6215GL1AMA1	CP: 230V-1ph-50Hz Fan: 230V-1ph-50Hz	6.7	25	-	802	1009	1248	1534	1836	2138	2481
			32	-	721	908	1126	1388	1665	1941	2258
			38	-	646	817	1016	1257	1512	1766	2060
			43	-	583	738	922	1145	1382	1618	1892
HB2NT6222GL-1AMA1	CP: 230V-1ph-50Hz Fan: 230V-1ph-50Hz	8.5	25	-	981	1249	1574	1969	2384	2798	3258
			32	-	860	1103	1395	1750	2122	2494	2907
			38	-	754	976	1242	1563	1900	2237	2611
			43	-	665	870	1114	1408	1717	2025	2367
HB2NT6224GL-1AMA1	CP: 230V-1ph-50Hz Fan: 230V-1ph-50Hz	9	25	-	1119	1444	1847	2360	2908	3455	4087
			32	-	973	1272	1641	2105	2600	3094	3664
			38	-	850	1125	1462	1883	2330	2777	3295
			43	-	751	1002	1311	1695	2104	2512	2984
HB2NT6226GL-1AMA1	CP: 230V-1ph-50Hz Fan: 230V-1ph-50Hz	10.3	25	-	1259	1625	2055	2576	3126	3675	4309
			32	-	1095	1422	1809	2285	2790	3295	3882
			38	-	958	1248	1599	2035	2501	2966	3515
			43	-	847	1107	1424	1827	2259	2691	3207
HB2NJ9232GL-1AMA1	CP: 230V-1ph-50Hz Fan: 230V-1ph-50Hz	10.3	25	-	1529	1953	2449	3038	3655	4271	4952
			32	-	1327	1710	2158	2692	3250	3808	4430
			38	-	1152	1502	1911	2399	2910	3420	3989
			43	-	1006	1330	1707	2157	2629	3101	3630
HB2NJ9232GM-1YMA1	CP: 400V-3ph-50Hz Fan: 230V-1ph-50Hz	4.2	25	-	1458	1856	2320	2864	3427	3990	4599
			32	-	1262	1622	2038	2522	3022	3522	4058
			38	-	1078	1410	1788	2223	2672	3121	3602
			43	-	912	1224	1574	1971	2379	2787	3225
HB2NTU6238GL1AMA1	CP: 230V-1ph-50Hz Fan: 230V-1ph-50Hz	16.7	25	-	1656	2076	2575	3171	3794	4416	5098
			32	-	1456	1839	2290	2826	3384	3942	4558
			38	-	1291	1642	2052	2537	3043	3548	4102
			43	-	1156	1481	1859	2302	2765	3227	3734
HB2NJ9238GM-1YMA1	CP: 400V-3ph-50Hz Fan: 230V-1ph-50Hz	4.4	25	-	1862	2332	2872	3499	4149	4798	5504
			32	-	1622	2042	2527	3094	3685	4276	4923
			38	-	1420	1802	2244	2764	3306	3847	4449
			43	-	1256	1608	2016	2499	3003	3507	4070
HB2NJX6250GM1YMA1	CP: 400V-3ph-50Hz Fan: 230V-1ph-50Hz	6	25	-	2542	3194	3919	4752	5624	6495	7475
			32	-	2202	2800	3469	4245	5059	5873	6794
			38	-	1935	2476	3089	3810	4569	5327	6194
			43	-	1730	2217	2778	3448	4157	4865	5684
HB2ERF15-CB-1AMA1	CP: 230V-1ph-50Hz Fan: 230V-1ph-50Hz	14.3	25	2100	2621	3224	3906	4700	5793	6885	7994
			32	2080	2567	3132	3778	4449	5357	6264	7286
			38	1891	2337	2851	3441	4246	5317	6388	6675
			43	1729	2139	2611	3154	3984	4628	5271	6163
HB2ERF15-CA-1YMA1	CP: 400V-3ph-50Hz Fan: 230V-1ph-50Hz	5.7	25	2139	2670	3285	3978	4786	5632	6477	7421
			32	2022	2540	3137	3806	5822	6009	6196	7095
			38	1879	2375	2945	3584	4320	5089	5857	6712
			43	1733	2203	2745	3352	4052	4783	5514	6330
HB2ERF19-CB-1AMA1	CP: 230V-1ph-50Hz Fan: 230V-1ph-50Hz	16.6	25	2530	3157	3881	4697	5642	6629	7616	8711
			32	2386	2993	3690	4469	5365	6297	7229	8260
			38	2213	2791	3453	4190	5035	5914	6793	7765
			43	2039	2585	3210	3907	4706	5537	6368	7289

This table continues on the next page →

*MBP SH10 Tables
1. EN 13215 nominal conditions, Superheat 10K, Subcooling 3K, Midpoint evaporation temperature

MBP R455A SH10K

Condensing units			Amb. temp.	Cooling capacity (W) [1]*							
CDU Models	Voltage supply (V)	MCC comp + fan Max. Contin. Current [A]	(°C)	-25°C	-20°C	-15°C	-10°C	-5°C	0°C	+5°C	+10°C
HB2ERF19-CA-1YMA1	CP: 400V-3ph-50Hz Fan: 230V-1ph-50Hz	6.3	25	2530	3157	3881	4697	5642	6629	7616	8711
			32	2386	2993	3690	4469	5365	6297	7229	8260
			38	2213	2791	3453	4190	5035	5914	6793	7765
			43	2039	2585	3210	3907	4706	5537	6368	7289
HB2ERF21-CB-1AMA1	CP: 230V-1ph-50Hz Fan: 230V-1ph-50Hz	18.4	25	2862	3573	4395	5322	6073	7358	8643	10120
			32	2699	3387	4176	5060	6029	7108	8186	9495
			38	2504	3158	3906	4742	5655	6669	7682	8782
			43	2307	2925	3632	4420	5281	6238	7194	8234
HB2ERF21-CA-1YMA1	CP: 400V-3ph-50Hz Fan: 230V-1ph-50Hz	7.0	25	2926	3652	4492	5439	6282	7555	8828	10101
			32	2758	3460	4265	5167	6155	7254	8353	9544
			38	2558	3225	3988	4840	5769	6801	7833	8952
			43	2356	2986	3706	4509	5386	6359	7332	8391
HB2ERF26-CA-1YMA1	CP: 400V-3ph-50Hz Fan: 230V-1ph-50Hz	8.5	25	3538	4418	5436	6587	7932	9341	10749	12330
			32	3350	4214	5210	6331	7632	8993	10354	11877
			38	3116	3947	4905	5982	7230	8534	9838	11300
			43	2877	3668	4581	5610	6803	8052	9300	10703
HB2ERF30-CA-1YMA1	CP: 400V-3ph-50Hz Fan: 230V-1ph-50Hz	9.9	25	4277	5339	6568	7955	9572	11263	12953	14844
			32	4043	5079	6272	7611	9159	10774	12388	14187
			38	3757	4749	5888	7165	8637	10172	11707	13417
			43	3465	4406	5488	6701	8100	9560	11020	12650
HB2ERF37-CA-1YMA1	CP: 400V-3ph-50Hz Fan: 230V-1ph-50Hz	11.7	25	5093	6354	7812	9455	11360	13348	15335	17542
			32	4803	6024	7426	8995	10797	12673	14549	16624
			38	4455	5617	6948	8431	10131	11899	13666	15621
			43	4104	5201	6457	7860	9465	11136	12806	14659

*MBP SH10 Tables
1. EN 13215 nominal conditions, Superheat 10K, Subcooling 3K, Midpoint evaporation temperature

MBP R455A RTG20

Condensing units			Amb. temp.	Cooling capacity (W) [1*]								Eco design [2*]		Annual Energy Cons. [2*]
CDU Models	Voltage supply (V)	MCC comp + fan Max. Contin. Current [A]	(°C)	-25°C	-20°C	-15°C	-10°C	-5°C	0°C	+5°C	+10°C	Type	COP › 1.6 SEPR › 2.55	[kWh/y]
HB2NEU6212GL1AMA1	CP: 230V-1ph-50Hz Fan: 230V-1ph-50Hz	5.3	25	-	577	733	913	1126	1350	1573	1825	COP	1.66	-
			32	-	531	674	838	1031	1234	1436	1663			
			38	-	483	614	765	941	1125	1309	1515			
			43	-	438	559	698	860	1029	1197	1385			
HB2NEU6215GL1AMA1	CP: 230V-1ph-50Hz Fan: 230V-1ph-50Hz	6.7	25	-	832	1041	1281	1563	1858	2152	2481	COP	1.81	-
			32	-	756	946	1165	1422	1691	1959	2258			
			38	-	687	860	1060	1295	1541	1787	2060			
			43	-	626	785	969	1186	1414	1641	1892			
HB2NT6222GL-1AMA1	CP: 230V-1ph-50Hz Fan: 230V-1ph-50Hz	8.5	25	-	1022	1295	1622	2013	2419	2824	3258	COP	1.76	-
			32	-	907	1155	1450	1800	2162	2523	2907			
			38	-	804	1032	1301	1617	1943	2269	2611			
			43	-	716	928	1177	1465	1761	2057	2367			
HB2NT6224GL-1AMA1	CP: 230V-1ph-50Hz Fan: 230V-1ph-50Hz	9.0	25	-	1158	1487	1894	2404	2943	3481	4087	COP	1.89	-
			32	-	1018	1324	1696	2156	2640	3123	3664			
			38	-	901	1181	1522	1938	2375	2811	3295			
			43	-	802	1062	1375	1754	2151	2548	2984			
HB2NT6226GL-1AMA1	CP: 230V-1ph-50Hz Fan: 230V-1ph-50Hz	10.3	25	-	1306	1679	2112	2627	3166	3705	4309	COP	1.87	-
			32	-	1148	1482	1874	2343	2836	3329	3882			
			38	-	1016	1314	1669	2099	2551	3003	3515			
			43	-	909	1174	1497	1893	2312	2731	3207			
HB2NJ9232GL-1AMA1	CP: 230V-1ph-50Hz Fan: 230V-1ph-50Hz	10.3	25	-	1591	2023	2524	3106	3708	4309	4952	COP	1.85	-
			32	-	1397	1789	2242	2768	3310	3852	4430			
			38	-	1226	1587	2001	2480	2974	3467	3989			
			43	-	1082	1417	1801	2242	2697	3151	3630			
HB2NJ9232GM-1YMA1	CP: 400V-3ph-50Hz Fan: 230V-1ph-50Hz	4.2	25	-	1515	1920	2389	2927	3478	4028	4599	COP	1.80	-
			32	-	1328	1697	2116	2591	3077	3563	4058			
			38	-	1146	1488	1872	2298	2732	3165	3602			
			43	-	981	1305	1661	2049	2441	2832	3225			
HB2NTU6238GL1AMA1	CP: 230V-1ph-50Hz Fan: 230V-1ph-50Hz	16.7	25	-	1724	2151	2654	3242	3850	4457	5098	COP	2.07	-
			32	-	1534	1924	2379	2906	3448	3989	4558			
			38	-	1375	1734	2149	2624	3111	3598	4102			
			43	-	1245	1580	1961	2394	2837	3279	3734			
HB2NJ9238GM-1YMA1	CP: 400V-3ph-50Hz Fan: 230V-1ph-50Hz	4.4	25	-	1946	2426	2972	3588	4219	4850	5504	COP	1.76	-
			32	-	1714	2144	2635	3191	3762	4332	4923			
			38	-	1518	1910	2358	2866	3386	3906	4449			
			43	-	1357	1720	2134	2605	3087	3568	4070			
HB2NJX6250GM1YMA1	CP: 400V-3ph-50Hz Fan: 230V-1ph-50Hz	6.0	25	-	2640	3301	4027	4846	5695	6543	7475	COP	2.04	-
			32	-	2311	2919	3591	4352	5141	5930	6794			
			38	-	2052	2605	3223	3928	4660	5392	6194			
			43	-	1855	2354	2921	3574	4255	4935	5684			
HB2ERF15-CB-1AMA1	CP: 230V-1ph-50Hz Fan: 230V-1ph-50Hz	14.3	25	2184	2709	3312	3989	4768	5580	6391	7288	COP	2.15	-
			32	-	2613	3202	3857	4600	5369	6138	6973			
			38	-	-	3042	3669	4373	5097	5822	6599			
			43	-	-	-	3463	4130	4814	5499	6227			
HB2ERF15-CA-1YMA1	CP: 400V-3ph-50Hz Fan: 230V-1ph-50Hz	5.7	25	2225	2760	3374	4064	4857	5683	6509	7421	COP	2.30	-
			32	-	2661	3261	3928	4684	5466	6248	7095			
			38	-	-	3098	3735	4450	5187	5924	6712			
			43	-	-	-	3525	4202	4898	5593	6330			
HB2ERF19-CB-1AMA1	CP: 230V-1ph-50Hz Fan: 230V-1ph-50Hz	16.6	25	2635	3267	3993	5736	6851	7257	7662	8711	COP	2.07	-
			32	-	3143	3846	4625	5499	6399	7299	8260			
			38	-	-	3643	4382	5202	6042	6881	7765			
			43	-	-	-	4125	4895	5682	6469	7289			

This table continues on the next page →

*MBP RGT20 Tables
1. EN 13215 nominal conditions, Return Gas Temperature 20°C, Subcooling 3K, Subcooling 3K, Midpoint evaporation temperature
2. EN 13215 rated conditions, Return Gas Temperature 20°C, Subcooling 3K, Midpoint evaporation temperature -10°C

MBP R455A RTG20

Condensing units			Amb. temp.	Cooling capacity (W) [1*]								Eco design [2*]		Annual Energy Cons. [2*]
CDU Models	Voltage supply (V)	MCC comp + fan Max. Contin. Current [A]	(°C)	-25°C	-20°C	-15°C	-10°C	-5°C	0°C	+5°C	+10°C	Type	COP › 1.6 SEPR › 2.55	[kWh/y]
HB2ERF19-CA-1YMA1	CP: 400V-3ph-50Hz Fan: 230V-1ph-50Hz	6.3	25	2710	3360	4107	4942	5896	6885	7873	8947	COP	2.29	-
			32	-	3231	3953	4752	5648	6570	7491	8473			
			38	-	-	3743	4499	5338	6197	7055	7959			
			43	-	-	-	4234	2021	4325	6629	7466			
HB2ERF21-CB-1AMA1	CP: 230V-1ph-50Hz Fan: 230V-1ph-50Hz	18.4	25	2980	3696	4520	5444	6486	7591	8696	9875	SEPR	3.28	9809
			32	-	3555	4352	5235	6190	7228	8266	9356			
			38	-	-	4122	4957	5856	6819	7782	8782			
			43	-	-	-	4666	5512	6411	7310	8234			
HB2ERF21-CA-1YMA1	CP: 400V-3ph-50Hz Fan: 230V-1ph-50Hz	7.0	25	3046	3779	4621	5564	6467	7675	8882	10101	SEPR	3.39	9703
			32	-	3633	4446	5347	6322	7379	8435	9544			
			38	-	-	4209	5062	5976	6956	7936	8952			
			43	-	-	-	4762	5623	6537	7450	8391			
HB2ERF26-CA-1YMA1	CP: 400V-3ph-50Hz Fan: 230V-1ph-50Hz	8.5	25	3678	4561	5577	6719	8039	9417	10795	12330	SEPR	3.53	11340
			32	-	4406	5406	6520	7790	9109	10428	11877			
			38	-	-	5146	6218	7430	8684	9938	11300			
			43	-	-	-	7037	8422	8920	9418	10703			
HB2ERF30-CA-1YMA1	CP: 400V-3ph-50Hz Fan: 230V-1ph-50Hz	9.9	25	4449	5518	6747	8125	9713	11366	13018	14844	SEPR	3.72	12992
			32	-	5321	6521	7853	9364	10928	12491	14187			
			38	-	-	6193	7467	8896	10368	11840	13417			
			43	-	-	-	7047	8398	9787	11176	12650			
HB2ERF37-CA-1YMA1	CP: 400V-3ph-50Hz Fan: 230V-1ph-50Hz	11.7	25	5303	6576	8038	9674	11546	13487	15428	17542	SEPR	3.67	15589
			32	-	6325	7740	9307	11066	12877	14688	16624			
			38	-	-	7330	8816	10464	12153	13841	15621			
			43	-	-	-	8298	9846	11426	13006	14659			

*MBP RGT20 Tables
1. EN 13215 nominal conditions, Return Gas Temperature 20°C, Subcooling 3K, Subcooling 3K, Midpoint evaporation temperature
2. EN 13215 rated conditions, Return Gas Temperature 20°C, Subcooling 3K, Midpoint evaporation temperature -10°C

MBP R452A SH10K

Condensing units			Amb. temp.	Cooling capacity (W) [1]*							
CDU Models	Voltage supply (V)	MCC comp + fan Max. Contin. Current [A]	(°C)	-25°C	-20°C	-15°C	-10°C	-5°C	0°C	+5°C	+10°C
HB2NEU6212GL1AMA1	CP: 230V-1ph-50Hz Fan: 230V-1ph-50Hz	5.3	25	-	627	773	947	1147	1368	1610	1869
			32	-	540	675	834	1014	1214	1431	1662
			38	-	466	590	734	898	1079	1274	1482
			43	-	-	520	653	803	967	1144	1331
HB2NEU6215GL1AMA1	CP: 230V-1ph-50Hz Fan: 230V-1ph-50Hz	6.7	25	-	840	1031	1252	1497	1766	2055	2359
			32	-	731	903	1102	1325	1569	1831	2108
			38	-	636	792	974	1177	1400	1639	1892
			43	-	-	702	869	1056	1261	1482	1716
HB2NT6222GL-1AMA1	CP: 230V-1ph-50Hz Fan: 230V-1ph-50Hz	8.5	25	-	999	1242	1516	1818	2145	2494	2865
			32	-	860	1074	1316	1582	1871	2183	2514
			38	-	-	931	1144	1380	1638	1917	2216
			43	-	-	-	1006	1216	1447	1699	1971
HB2NT6224GL-1AMA1	CP: 230V-1ph-50Hz Fan: 230V-1ph-50Hz	9.0	25	-	1210	1540	1911	2317	2757	3225	3720
			32	-	1061	1343	1666	2025	2419	2843	3296
			38	-	924	1170	1457	1781	2140	2531	2951
			43	-	-	1031	1291	1589	1922	2287	2683
HB2NT6226GL-1AMA1	CP: 230V-1ph-50Hz Fan: 230V-1ph-50Hz	10.3	25	-	1345	1685	2074	2506	2977	3481	4012
			32	-	1160	1461	1807	2195	2619	3075	3558
			38	-	1007	1275	1586	1937	2322	2739	3181
			43	-	-	1131	1414	1734	2088	2472	2881
HB2NJ9232GL-1AMA1	CP: 230V-1ph-50Hz Fan: 230V-1ph-50Hz	10.3	25	-	1399	1808	2262	2756	3284	3841	4420
			32	-	1164	1527	1934	2380	2860	3367	3897
			38	-	968	1288	1654	2057	2495	2959	3446
			43	-	-	1098	1426	1793	2193	2622	3072
HB2NJ9232GM-1YMA1	CP: 400V-3ph-50Hz Fan: 230V-1ph-50Hz	4.2	25	-	1469	1870	2341	2875	3459	4082	4734
			32	-	1261	1620	2042	2521	3045	3604	4188
			38	-	1084	1405	1785	2217	2690	3195	3722
			43	-	-	-	1576	1968	2399	2858	3337
HB2NTU6238GL1AMA1	CP: 230V-1ph-50Hz Fan: 230V-1ph-50Hz	16.7	25	-	1718	2099	2562	3085	3646	4225	4803
			32	-	1501	1835	2244	2706	3201	3711	4216
			38	-	-	1608	1970	2381	2820	3271	3714
			43	-	-	-	1747	2115	2508	2909	3301
HB2NJ9238GM-1YMA1	CP: 400V-3ph-50Hz Fan: 230V-1ph-50Hz	4.4	25	-	1838	2319	2842	3404	4002	4631	5287
			32	-	1571	1992	2457	2963	3506	4081	4683
			38	-	-	1715	2131	2588	3084	3613	4170
			43	-	-	-	1866	2283	2739	3230	-
HB2NJX6250GM1YMA1	CP: 400V-3ph-50Hz Fan: 230V-1ph-50Hz	6.0	25	-	2472	3035	3688	4418	5211	6055	6937
			32	-	2184	2680	3256	3902	4607	5358	6144
			38	-	1913	2358	2875	3456	4090	4767	5476
			43	-	-	-	2562	3092	3671	4289	4936
HB2ERF15-CB-1AMA1	CP: 230V-1ph-50Hz Fan: 230V-1ph-50Hz	14.3	25	2296	2830	3451	4164	4972	5929	6885	7994
			32	2080	2567	3132	3778	4514	5389	6264	7286
			38	1891	2337	2851	3441	4114	5251	6388	6675
			43	1729	2139	2611	3154	3773	4522	5271	6163
HB2ERF15-CA-1YMA1	CP: 400V-3ph-50Hz Fan: 230V-1ph-50Hz	5.7	25	2472	3022	3656	4375	5183	6124	7065	8135
			32	2252	2755	3331	3984	4718	5577	6436	7419
			38	2060	2521	3046	3642	4313	5101	5889	6798
			43	1897	2321	2803	3351	3968	4698	5428	6275
HB2ERF19-CB-1AMA1	CP: 230V-1ph-50Hz Fan: 230V-1ph-50Hz	16.6	25	2751	3383	4113	4945	5883	6985	8087	9353
			32	2489	3065	3726	4481	5331	6335	7339	8506
			38	2261	2786	3387	4074	4850	5772	6694	7779
			43	2065	2546	3099	3729	4442	5298	6154	7173

This table continues on the next page →

*MBP SH10 Tables
1. EN 13215 nominal conditions, Superheat 10K, Subcooling 3K, Midpoint evaporation temperature

MBP R452A SH10K

Condensing units			Amb. temp.	Cooling capacity (W) [1*]							
CDU Models	Voltage supply (V)	MCC comp + fan Max. Contin. Current [A]	(°C)	-25°C	-20°C	-15°C	-10°C	-5°C	0°C	+5°C	+10°C
HB2ERF19-CA-1YMA1	CP: 400V-3ph-50Hz Fan: 230V-1ph-50Hz	6.3	32	2535	3120	3792	4559	5423	6442	7460	8645
			38	2302	2836	3447	4144	4932	5868	6804	7904
			43	2102	2592	3152	3792	4517	5386	6254	7288
			25	3102	3814	4636	5574	6631	7873	9115	10544
HB2ERF21-CB-1AMA1	CP: 230V-1ph-50Hz Fan: 230V-1ph-50Hz	18.4	32	2807	3454	4200	5048	6005	7136	8267	9581
			38	2549	3140	3817	4588	5460	6499	7537	8758
			43	2328	2870	3490	4198	5000	5963	6926	8076
			25	3147	3868	4702	5651	6721	7978	9235	10681
HB2ERF21-CA-1YMA1	CP: 400V-3ph-50Hz Fan: 230V-1ph-50Hz	7.0	32	2847	3503	4258	5117	6085	7683	9281	9705
			38	2585	3184	3870	4650	5533	6584	7635	8870
			43	2361	2910	3538	4255	5067	6041	7014	8178
			25	3871	4780	5840	7062	8456	10120	11784	13724
HB2ERF26-CA-1YMA1	CP: 400V-3ph-50Hz Fan: 230V-1ph-50Hz	8.5	32	3510	4340	5306	6419	7689	9214	10739	12530
			38	3193	3953	4836	5852	7017	8423	9828	11494
			43	2922	3622	4433	5369	6444	7751	9058	10622
			25	4636	5713	6964	8400	10030	11960	13889	16124
HB2ERF30-CA-1YMA1	CP: 400V-3ph-50Hz Fan: 230V-1ph-50Hz	9.9	32	4199	5182	6320	7623	9106	10870	12633	14693
			38	3817	4716	5752	6942	8294	9918	11542	13456
			43	3490	4316	5268	6361	7608	9116	10624	12419
			25	5458	6713	8161	9816	11682	13874	16065	18591
HB2ERF37-CA-1YMA1	CP: 400V-3ph-50Hz Fan: 230V-1ph-50Hz	11.7	32	4939	6082	7395	8894	10585	12583	14581	16905
			38	4486	5527	6723	8085	9629	11464	13299	15452
			43	4098	5053	6149	7398	8820	10525	12229	14244
			43	4098	5053	6149	7398	8820	10525	12229	14244

MBP R452A RTG20

Condensing units			Amb. temp.	Cooling capacity (W) [1*]								Eco design [2*]		Annual Energy Cons. [2*]
CDU Models	Voltage supply (V)	MCC comp + fan Max. Contin. Current [A]	(°C)	-25°C	-20°C	-15°C	-10°C	-5°C	0°C	+5°C	+10°C	Type	COP › 1.6 SEPR › 2.55	[kWh/y]
HB2NEU6212GL1AMA1	CP: 230V-1ph-50Hz Fan: 230V-1ph-50Hz	5.3	25	-	660	807	979	1174	1388	1619	1863	COP	1.73	-
			32	-	577	713	869	1045	1237	1442	1657			
			38	-	506	631	774	933	1105	1288	1477			
			43	-	-	564	696	841	996	1159	1327			
HB2NEU6215GL1AMA1	CP: 230V-1ph-50Hz Fan: 230V-1ph-50Hz	6.7	25	-	887	1078	1296	1536	1794	2068	2352	COP	1.81	-
			32	-	783	956	1152	1369	1602	1847	2101			
			38	-	692	850	1029	1226	1437	1659	1887			
			43	-	-	763	928	1109	1302	1504	1712			
HB2NT6222GL-1AMA1	CP: 230V-1ph-50Hz Fan: 230V-1ph-50Hz	8.5	25	-	1056	1301	1573	1868	2184	2518	2865	COP	1.60	-
			32	-	922	1139	1378	1637	1915	2208	2516			
			38	-	-	1000	1211	1440	1685	1945	2218			
			43	-	-	-	1076	1279	1497	1729	1974			
HB2NT6224GL-1AMA1	CP: 230V-1ph-50Hz Fan: 230V-1ph-50Hz	9.0	25	-	1278	1609	1976	2375	2799	3245	3707	COP	1.79	-
			32	-	1136	1420	1740	2090	2468	2867	3285			
			38	-	1005	1254	1538	1853	2195	2560	2943			
			43	-	-	1120	1378	1667	1982	2320	2677			
HB2NT6226GL-1AMA1	CP: 230V-1ph-50Hz Fan: 230V-1ph-50Hz	10.3	25	-	1420	1761	2146	2569	3024	3503	4000	COP	1.84	-
			32	-	1243	1545	1889	2267	2674	3103	3548			
			38	-	1097	1367	1676	2016	2383	2771	3173			
			43	-	-	1232	1512	1821	2155	2508	2874			
HB2NJ9232GL-1AMA1	CP: 230V-1ph-50Hz Fan: 230V-1ph-50Hz	10.3	25	-	1476	1889	2342	2828	3339	3867	4407	COP	1.65	-
			32	-	1245	1614	2021	2459	2920	3399	3888			
			38	-	1052	1380	1745	2141	2560	2995	3439			
			43	-	-	-	1521	1880	2262	2659	3066			
HB2NJ9232GM-1YMA1	CP: 400V-3ph-50Hz Fan: 230V-1ph-50Hz	4.2	25	-	1553	1956	2426	2951	3517	4112	4721	COP	1.86	-
			32	-	1352	1715	2137	2606	3111	3639	4178			
			38	-	1180	1507	1888	2310	2763	3234	3713			
			43	-	-	-	1685	2067	2476	2901	3330			
HB2NTU6238GL1AMA1	CP: 230V-1ph-50Hz Fan: 230V-1ph-50Hz	16.7	25	-	1819	2198	2656	3168	3708	4255	4788	COP	1.97	-
			32	-	1612	1946	2349	2799	3272	3746	4203			
			38	-	-	1729	2085	2482	2897	3310	3703			
			43	-	-	-	1871	2223	2590	2951	3290			
HB2NJ9238GM-1YMA1	CP: 400V-3ph-50Hz Fan: 230V-1ph-50Hz	4.4	25	-	1946	2429	2949	3499	4074	4668	5274	COP	1.87	-
			32	-	1687	2112	2574	3068	3586	4124	4674			
			38	-	-	1844	2256	2700	3170	3660	4163			
			43	-	-	-	1998	2401	2831	3281	-			
HB2NJX6250GM1YMA1	CP: 400V-3ph-50Hz Fan: 230V-1ph-50Hz	6.0	25	-	2621	3178	3821	4533	5299	6103	6930	COP	1.87	-
			32	-	2336	2833	3404	4035	4712	5420	6146			
			38	-	2080	2530	3043	3608	4211	4839	5480			
			43	-	-	-	2744	3255	3798	4360	4931			
HB2ERF15-CB-1AMA1	CP: 230V-1ph-50Hz Fan: 230V-1ph-50Hz	14.3	25	2476	3022	3649	4358	5151	6062	6973	7994	COP	2.17	-
			32	2286	2789	3360	4004	4722	5544	6366	7286			
			38	2121	2583	3106	3693	4344	5092	5840	6675			
			43	-	-	2888	3427	4024	4710	5396	6163			
HB2ERF15-CA-1YMA1	CP: 400V-3ph-50Hz Fan: 230V-1ph-50Hz	5.7	25	2554	3113	3751	4472	5275	6194	7112	8135	COP	2.28	-
			32	2357	2869	3451	4105	4832	5663	6494	7419			
			38	2184	2654	3186	3782	4444	5200	5956	6798			
			43	-	-	2959	3506	4113	4807	5501	6275			
HB2ERF19-CB-1AMA1	CP: 230V-1ph-50Hz Fan: 230V-1ph-50Hz	16.6	25	2977	3626	4365	5196	6116	7158	8200	9353	COP	2.09	-
			32	2748	3343	4016	4769	5598	6535	7472	8506			
			38	2548	3094	3709	4392	5145	5994	6842	7779			
			43	-	-	3446	4072	4762	5539	6315	7173			

This table continues on the next page →

*MBP RGT20 Tables
1. EN 13215 nominal conditions, Return Gas Temperature 20°C, Subcooling 3K, Subcooling 3K, Midpoint evaporation temperature
2. EN 13215 rated conditions, Return Gas Temperature 20°C, Subcooling 3K, Midpoint evaporation temperature -10°C

MBP R452A RTG20

Condensing units			Amb. temp.	Cooling capacity (W) [1*]								Eco design [2*]		Annual Energy Cons. [2*]
CDU Models	Voltage supply (V)	MCC comp + fan Max. Contin. Current [A]	(°C)	-25°C	-20°C	-15°C	-10°C	-5°C	0°C	+5°C	+10°C	Type	COP › 1.6 SEPR › 2.55	[kWh/y]
HB2ERF19-CA-1YMA1	CP: 400V-3ph-50Hz Fan: 230V-1ph-50Hz	6.3	25	3032	3692	4256	5288	6222	7280	8337	9507	COP	3.03	-
			32	2799	3404	4088	4853	5694	6645	7595	8645			
			38	2595	3151	3775	4468	5233	6094	6954	7904			
			43	-	-	3507	4142	4842	5630	6417	7288			
HB2ERF21-CB-1AMA1	CP: 230V-1ph-50Hz Fan: 230V-1ph-50Hz	18.4	25	3356	4088	4922	5858	6894	8070	9246	10544	SEPR	3.23	10900
			32	3098	3769	4527	5374	6307	7363	8418	10611			
			38	2873	3489	4180	4950	5795	6749	7703	8758			
			43	-	-	3883	4588	5362	6235	7108	8076			
HB2ERF21-CA-1YMA1	CP: 400V-3ph-50Hz Fan: 230V-1ph-50Hz	7.0	25	3406	4148	4993	5940	6989	8179	9369	10681	SEPR	3.42	10365
			32	3144	3824	4591	5449	6393	7461	8528	9705			
			38	-	3539	4239	5018	5874	6840	7805	8870			
			43	-	-	3938	4651	5434	6317	7200	8178			
HB2ERF26-CA-1YMA1	CP: 400V-3ph-50Hz Fan: 230V-1ph-50Hz	8.5	25	4162	5088	6156	7372	8737	10328	11919	13724	SEPR	3.54	12197
			32	3846	4698	5673	6778	8018	9458	10898	12530			
			38	3569	4354	5247	6256	7386	8698	10009	11494			
			43	-	4058	4881	5809	6846	8052	9257	10622			
HB2ERF30-CA-1YMA1	CP: 400V-3ph-50Hz Fan: 230V-1ph-50Hz	9.9	25	4998	6100	7363	8793	10391	12228	14064	16124	SEPR	3.44	14009
			32	4616	5628	6780	8078	9521	11179	12837	14693			
			38	4282	5213	6266	7449	8761	10266	11771	13456			
			43	-	-	5826	6910	8114	9495	10875	12419			
HB2ERF37-CA-1YMA1	CP: 400V-3ph-50Hz Fan: 230V-1ph-50Hz	11.7	25	5903	7191	8659	10309	12137	14213	16288	18591	SEPR	3.44	16866
			32	5450	6630	7966	9458	11109	12974	14839	16905			
			38	5053	6138	7357	8713	10209	11898	13587	15452			
			43	-	-	6833	8077	9448	10993	12537	14244			

*MBP RGT20 Tables
1. EN 13215 nominal conditions, Return Gas Temperature 20°C, Subcooling 3K, Subcooling 3K, Midpoint evaporation temperature
2. EN 13215 rated conditions, Return Gas Temperature 20°C, Subcooling 3K, Midpoint evaporation temperature -10°C

MBP R454C SH10K

Condensing units			Amb. temp.	Cooling capacity (W) [1]*							
CDU Models	Voltage supply (V)	MCC comp + fan Max. Contin. Current [A]	(°C)	-25°C	-20°C	-15°C	-10°C	-5°C	0°C	+5°C	+10°C
HB2NEU6212GL1AMA1	CP: 230V-1ph-50Hz Fan: 230V-1ph-50Hz	5.3	25	-	490	623	780	962	1175	1387	1628
			32	-	443	567	714	881	1077	1273	1493
			38	-	400	516	651	806	986	1166	1370
			43	-	364	471	596	739	906	1072	1260
HB2NEU6215GL1AMA1	CP: 230V-1ph-50Hz Fan: 230V-1ph-50Hz	6.7	25	-	710	887	1096	1336	1620	1904	2226
			32	-	633	797	992	1214	1476	1738	2037
			38	-	569	720	900	1106	1349	1592	1869
			43	-	518	658	824	1014	1240	1466	1725
HB2NT6222GL-1AMA1	CP: 230V-1ph-50Hz Fan: 230V-1ph-50Hz	8.5	25	-	879	1108	1398	1741	2144	2546	2986
			32	-	784	993	1255	1563	1924	2285	2681
			38	-	688	885	1129	1413	1743	2073	2434
			43	-	598	791	1022	1289	1597	1905	2239
HB2NT6224GL-1AMA1	CP: 230V-1ph-50Hz Fan: 230V-1ph-50Hz	9.0	25	-	1005	1273	1626	2056	2582	3108	3705
			32	-	889	1140	1463	1852	2324	2796	3333
			38	-	778	1018	1319	1677	2107	2536	3023
			43	-	677	911	1196	1530	1928	2325	2771
HB2NT6226GL-1AMA1	CP: 230V-1ph-50Hz Fan: 230V-1ph-50Hz	10.3	25	-	1122	1440	1824	2270	2795	3320	3910
			32	-	997	1280	1625	2028	2508	2988	3532
			38	-	876	1135	1452	1823	2268	2713	3223
			43	-	767	1011	1307	1655	2074	2492	2976
HB2NJ9232GL-1AMA1	CP: 230V-1ph-50Hz Fan: 230V-1ph-50Hz	10.3	25	-	1394	1768	2212	2717	3302	3887	4538
			32	-	1204	1541	1943	2404	2943	3481	4085
			38	-	1045	1354	1723	2150	2651	3152	3716
			43	-	914	1203	1548	1947	2419	2890	3425
HB2NJ9232GM-1YMA1	CP: 400V-3ph-50Hz Fan: 230V-1ph-50Hz	4.2	25	-	1329	1681	2097	2571	3110	3649	4235
			32	-	1150	1467	1842	2267	2752	3236	3762
			38	-	986	1280	1623	2010	2452	2894	3373
			43	-	841	1118	1439	1799	2207	2615	3059
HB2NTU6238GL1AMA1	CP: 230V-1ph-50Hz Fan: 230V-1ph-50Hz	16.7	25	-	1627	2060	2464	2894	3459	4023	4804
			32	-	1427	1835	2203	2588	3097	3606	4327
			38	-	1263	1649	1989	2338	2802	3265	3935
			43	-	1129	1500	1818	2138	2565	2991	3617
HB2NJ9238GM-1YMA1	CP: 400V-3ph-50Hz Fan: 230V-1ph-50Hz	4.4	25	-	1711	2135	2625	3175	3800	4425	5110
			32	-	1478	1863	2310	2815	3392	3968	4604
			38	-	1295	1645	2056	2520	3055	3590	4186
			43	-	1153	1476	1855	2287	2788	3288	3849
HB2NJX6250GM1YMA1	CP: 400V-3ph-50Hz Fan: 230V-1ph-50Hz	6.0	25	-	2334	2907	3574	4328	5198	6068	7032
			32	-	2021	2553	3171	3868	4670	5472	6360
			38	-	1777	2271	2843	3488	4229	4970	5792
			43	-	1591	2051	2583	3182	3871	4559	5325
HB2ERF15-CB-1AMA1	CP: 230V-1ph-50Hz Fan: 230V-1ph-50Hz	14.3	25	2034	2273	3090	3746	4497	5394	6291	7339
			32	1861	2310	2833	3437	4129	4961	5793	6771
			38	1712	2127	2611	3170	3811	4587	5363	6283
			43	1586	1973	2423	2944	3544	4274	5004	5876
HB2ERF15-CA-1YMA1	CP: 400V-3ph-50Hz Fan: 230V-1ph-50Hz	5.7	25	1839	2286	3107	3767	4521	5423	6325	7379
			32	1872	2323	2849	3457	4151	4988	5824	6807
			38	1722	2139	2625	3188	3832	4612	5392	6317
			43	1595	1984	2437	2961	3563	4297	5031	5907
HB2ERF19-CB-1AMA1	CP: 230V-1ph-50Hz Fan: 230V-1ph-50Hz	16.6	25	2193	3010	3680	4449	5324	6363	7401	8609
			32	2226	2756	3372	4078	4884	5845	6805	7929
			38	2047	2537	3105	3758	4504	5399	6293	7348
			43	1896	2352	2880	3488	4185	5026	5866	6865

This table continues on the next page →

*MBP SH10 Tables
1. EN 13215 nominal conditions, Superheat 10K, Subcooling 3K, Midpoint evaporation temperature

MBP R454C SH10K

Condensing units			Amb. temp.	Cooling capacity (W) [1]*							
CDU Models	Voltage supply (V)	MCC comp + fan Max. Contin. Current [A]	(°C)	-25°C	-20°C	-15°C	-10°C	-5°C	0°C	+5°C	+10°C
HB2ERF19-CA-1YMA1	CP: 400V-3ph-50Hz Fan: 230V-1ph-50Hz	6.3	25	2252	3090	3776	4565	5459	6522	7584	8819
			32	2286	2829	3460	4183	5007	5990	6972	8121
			38	2102	2604	3185	3854	4617	5532	6447	7525
			43	1946	2414	2955	3577	4290	5150	6009	7030
HB2ERF21-CB-1AMA1	CP: 230V-1ph-50Hz Fan: 230V-1ph-50Hz	18.4	25	2753	3406	4163	5034	6022	7197	8371	9739
			32	2519	3119	3814	4613	5522	6607	7692	8965
			38	2316	2870	3512	4250	5091	6101	7111	8304
			43	2145	2661	3258	3945	4731	5679	6627	7756
HB2ERF21-CA-1YMA1	CP: 400V-3ph-50Hz Fan: 230V-1ph-50Hz	7.0	25	2809	3474	4247	5133	6139	7335	8530	9919
			32	2570	3182	3890	4703	5628	6732	7835	9129
			38	2363	2928	3581	4333	5188	6215	7242	8455
			43	2189	2714	3322	4020	4820	5784	6748	7895
HB2ERF26-CA-1YMA1	CP: 400V-3ph-50Hz Fan: 230V-1ph-50Hz	8.5	25	3423	4252	5221	6345	7632	9183	10733	12554
			32	3134	3898	4791	5825	7015	8454	9893	11595
			38	2883	3591	4416	5375	6479	7823	9166	10769
			43	2672	3331	4101	4996	6028	7293	8558	10078
HB2ERF30-CA-1YMA1	CP: 400V-3ph-50Hz Fan: 230V-1ph-50Hz	9.9	25	4081	5059	6200	7517	9020	10735	12450	14302
			32	3697	4561	5552	6677	7937	9399	10861	12507
			38	3215	3975	4846	5837	6952	8254	9556	11033
			43	2832	3507	4282	5166	6163	7336	8508	9851
HB2ERF37-CA-1YMA1	CP: 400V-3ph-50Hz Fan: 230V-1ph-50Hz	11.7	25	4824	5967	7296	8822	10558	12401	14243	16281
			32	4345	5341	6475	7752	9172	10802	12432	14247
			38	3783	4658	5655	6782	8040	9494	10947	12578
			43	3333	4112	5000	6005	7134	8446	9757	11239

*MBP SH10 Tables

1. EN 13215 nominal conditions, Superheat 10K, Subcooling 3K, Midpoint evaporation temperature

MBP R454C RTG20

Condensing units			Amb. temp.	Cooling capacity (W) [1*]								Eco design [2*]		Annual Energy Cons. [2*]
CDU Models	Voltage supply (V)	MCC comp + fan Max. Contin. Current [A]	(°C)	-25°C	-20°C	-15°C	-10°C	-5°C	0°C	+5°C	+10°C	Type	COP › 1.6 SEPR › 2.55	[kWh/y]
HB2NEU6212GL1AMA1	CP: 230V-1ph-50Hz Fan: 230V-1ph-50Hz	5.3	25	-	508	642	799	980	1188	1396	1628	COP	1.57	-
			32	-	465	591	738	903	1093	1283	1493			
			38	-	425	543	679	831	1005	1179	1370			
			43	-	391	500	626	768	928	1087	1260			
HB2NEU6215GL1AMA1	CP: 230V-1ph-50Hz Fan: 230V-1ph-50Hz	6.7	25	-	740	918	1128	1366	1642	1918	2226	COP	1.73	-
			32	-	667	834	1029	1249	1502	1755	2037			
			38	-	607	762	942	1145	1378	1611	1869			
			43	-	559	702	869	1058	1273	1488	1725			
HB2NT6222GL-1AMA1	CP: 230V-1ph-50Hz Fan: 230V-1ph-50Hz	8.5	25	-	919	1150	1443	1786	2178	2570	2986	COP	1.71	-
			32	-	830	1042	1307	1614	1963	2312	2681			
			38	-	738	940	1186	1468	1786	2103	2434			
			43	-	650	848	1083	1348	1641	1934	2239			
HB2NT6224GL-1AMA1	CP: 230V-1ph-50Hz Fan: 230V-1ph-50Hz	9.0	25	-	1044	1316	1671	2100	2616	3132	3705	COP	1.83	-
			32	-	935	1190	1516	1904	2364	2824	3333			
			38	-	828	1073	1378	1734	2151	2568	3023			
			43	-	729	970	1260	1593	1976	2359	2771			
HB2NT6226GL-1AMA1	CP: 230V-1ph-50Hz Fan: 230V-1ph-50Hz	10.3	25	-	1168	1491	1878	2322	2835	3348	3910	COP	1.83	-
			32	-	1050	1339	1687	2088	2554	3020	3532			
			38	-	934	1201	1521	1889	2319	2748	3223			
			43	-	827	1078	1379	1725	2128	2530	2976			
HB2NJ9232GL-1AMA1	CP: 230V-1ph-50Hz Fan: 230V-1ph-50Hz	10.3	25	-	1459	1840	2287	2790	3358	3925	4538	COP	1.81	-
			32	-	1275	1619	2025	2483	3003	3523	4085			
			38	-	1118	1436	1810	2234	2715	3196	3716			
			43	-	990	1289	1638	2035	2487	2938	3425			
HB2NJ9232GM-1YMA1	CP: 400V-3ph-50Hz Fan: 230V-1ph-50Hz	4.2	25	-	1388	1746	2166	2637	3161	3684	4235	COP	1.78	-
			32	-	1217	1541	1919	2341	2808	3274	3762			
			38	-	1055	1357	1704	2089	2512	2934	3373			
			43	-	911	1199	1524	1881	2269	2657	3059			
HB2NTU6238GL1AMA1	CP: 230V-1ph-50Hz Fan: 230V-1ph-50Hz	16.7	25	-	1705	2146	2549	2970	3516	4061	4804	COP	2.13	-
			32	-	1514	1930	2297	2673	3161	3649	4327			
			38	-	1354	1752	2091	2430	2871	3311	3935			
			43	-	1226	1609	1926	2235	2638	3041	3617			
HB2NJ9238GM-1YMA1	CP: 400V-3ph-50Hz Fan: 230V-1ph-50Hz	4.4	25	-	1799	2231	2724	3269	3872	4474	5110	COP	1.79	-
			32	-	1571	1965	2415	2915	3467	4019	4604			
			38	-	1391	1752	2167	2628	3137	3646	4186			
			43	-	1253	1586	1970	2398	2873	3347	3849			
HB2NJX6250GM1YMA1	CP: 400V-3ph-50Hz Fan: 230V-1ph-50Hz	6.0	25	-	2438	3016	3684	4430	5274	6118	7032	COP	2.08	-
			32	-	2133	2674	3294	3984	4757	5530	6360			
			38	-	1896	2401	2977	3615	4325	5034	5792			
			43	-	1717	2189	2725	3316	3972	4628	5325			
HB2ERF15-CB-1AMA1	CP: 230V-1ph-50Hz Fan: 230V-1ph-50Hz	14.3	25	1915	2627	3199	3855	4596	5468	6340	7339	COP	2.15	-
			32	-	2436	2964	3568	4249	5051	5852	6771			
			38	-	-	2761	3318	3949	4691	5432	6283			
			43	-	-	-	3108	3696	4389	5081	5876			
HB2ERF15-CA-1YMA1	CP: 400V-3ph-50Hz Fan: 230V-1ph-50Hz	5.7	25	2144	2642	3217	3876	4621	5498	6374	7379	COP	2.22	-
			32	-	2450	2981	3588	4272	5078	5884	6807			
			38	-	-	2776	3337	3970	4716	5461	6317			
			43	-	-	-	3125	3716	4412	5107	5907			
HB2ERF19-CB-1AMA1	CP: 230V-1ph-50Hz Fan: 230V-1ph-50Hz	16.6	25	2301	3143	3820	4589	5455	6461	7466	8609	COP	2.06	-
			32	-	2915	3538	4245	5039	5961	6883	7929			
			38	-	-	3293	3946	4678	5530	6382	7348			
			43	-	-	-	3695	4376	5170	5964	6865			

This table continues on the next page →

*MBP RGT20 Tables
1. EN 13215 nominal conditions, Return Gas Temperature 20°C, Subcooling 3K, Subcooling 3K, Midpoint evaporation temperature
2. EN 13215 rated conditions, Return Gas Temperature 20°C, Subcooling 3K, Midpoint evaporation temperature -10°C

MBP R454C RTG20

Condensing units			Amb. temp.	Cooling capacity (W) [1*]								Eco design [2*]		Annual Energy Cons. [2*]
CDU Models	Voltage supply (V)	MCC comp + fan Max. Contin. Current [A]	(°C)	-25°C	-20°C	-15°C	-10°C	-5°C	0°C	+5°C	+10°C	Type	COP › 1.6 SEPR › 2.55	[kWh/y]
HB2ERF19-CA-1YMA1	CP: 400V-3ph-50Hz Fan: 230V-1ph-50Hz	6.3	25	2626	2914	3921	4709	5595	6624	7652	8819	COP	2.28	-
			32	-	2993	3631	4355	5167	6110	7053	8121			
			38	-	-	3380	4048	4798	5668	6538	7525			
			43	-	-	-	3790	4487	5298	6109	7030			
HB2ERF21-CB-1AMA1	CP: 230V-1ph-50Hz Fan: 230V-1ph-50Hz	18.4	25	2602	3210	4322	5193	6171	7309	8446	9739	COP	2.17	-
			32	-	3298	4002	4802	5699	6741	7782	8965			
			38	-	-	3726	4463	5291	6252	7213	8304			
			43	-	-	-	4179	4949	5844	6738	7756			
HB2ERF21-CA-1YMA1	CP: 400V-3ph-50Hz Fan: 230V-1ph-50Hz	7.0	25	2951	3276	4409	5296	6291	7448	8605	9915	COP	2.35	-
			32	-	3365	4083	4897	5809	6868	7926	9129			
			38	-	-	3800	4551	5393	6370	7346	8455			
			43	-	-	-	4260	5044	5953	6862	7895			
HB2ERF26-CA-1YMA1	CP: 400V-3ph-50Hz Fan: 230V-1ph-50Hz	8.5	25	3582	4421	5395	6515	7787	9297	10807	12413	SEPR	3.23	11573
			32	-	4069	4933	5909	6995	8235	9474	10848			
			38	-	-	4345	5202	6158	7253	8347	9558			
			43	-	-	-	4636	5487	6466	7444	8528			
HB2ERF30-CA-1YMA1	CP: 400V-3ph-50Hz Fan: 230V-1ph-50Hz	9.9	25	4277	5270	6419	7734	9220	10969	12717	14723	SEPR	3.44	12917
			32	-	4889	5948	7157	8524	10131	11738	13581			
			38	-	-	5539	6657	7920	9407	10893	12600			
			43	-	-	-	6235	7413	8800	10187	11782			
HB2ERF37-CA-1YMA1	CP: 400V-3ph-50Hz Fan: 230V-1ph-50Hz	11.7	25	5066	6230	7572	9098	10815	12814	14813	17084	SEPR	3.36	15524
			32	-	5778	7012	8415	9988	11822	13655	15736			
			38	-	-	6527	7823	9275	10968	12660	14583			
			43	-	-	-	7324	8676	10253	11829	13623			

*MBP RGT20 Tables
1. EN 13215 nominal conditions, Return Gas Temperature 20°C, Subcooling 3K, Subcooling 3K, Midpoint evaporation temperature
2. EN 13215 rated conditions, Return Gas Temperature 20°C, Subcooling 3K, Midpoint evaporation temperature -10°C

MBP R448A/R449A SH10K

Condensing units			Amb. temp.	Cooling capacity (W) [1]*							
CDU Models	Voltage supply (V)	MCC comp + fan Max. Contin. Current [A]	(°C)	-25°C	-20°C	-15°C	-10°C	-5°C	0°C	+5°C	+10°C
HB2NEU6212GL1AMA1	CP: 230V-1ph-50Hz Fan: 230V-1ph-50Hz	5.3	25	-	-	717	887	1085	1313	1569	1850
			32	-	-	645	808	996	1209	1445	1703
			38	-	-	583	735	910	1105	1320	1554
			43	-	-	-	671	830	1008	1204	1415
HB2NEU6215GL1AMA1	CP: 230V-1ph-50Hz Fan: 230V-1ph-50Hz	6.7	25	-	-	974	1197	1452	1739	2056	2399
			32	-	-	878	1087	1324	1588	1877	2188
			38	-	-	795	987	1204	1445	1706	1987
			43	-	-	-	-	1098	1316	1553	1805
HB2NT6222GL-1AMA1	CP: 230V-1ph-50Hz Fan: 230V-1ph-50Hz	8.5	25	-	-	1184	1465	1779	2123	2494	2886
			32	-	-	1062	1314	1594	1899	2227	2573
			38	-	-	-	1176	1423	1693	1982	2289
			43	-	-	-	-	1269	1508	1765	2039
HB2NT6224GL-1AMA1	CP: 230V-1ph-50Hz Fan: 230V-1ph-50Hz	9.0	25	-	-	1444	1814	2223	2669	3148	3657
			32	-	-	1308	1634	1999	2400	2836	3303
			38	-	-	1176	1470	1802	2171	2574	3009
			43	-	-	-	-	1639	1984	2363	2774
HB2NT6226GL-1AMA1	CP: 230V-1ph-50Hz Fan: 230V-1ph-50Hz	10.3	25	-	-	1590	1990	2444	2945	3486	4058
			32	-	-	1442	1801	2207	2656	3139	3652
			38	-	-	1303	1628	1995	2399	2835	3297
			43	-	-	-	-	1814	2182	2579	2998
HB2NJ9232GL-1AMA1	CP: 230V-1ph-50Hz Fan: 230V-1ph-50Hz	10.3	25	-	-	1802	2288	2833	3428	4064	4734
			32	-	-	1608	2044	2535	3074	3654	4265
			38	-	-	-	1827	2276	2771	3303	3867
			43	-	-	-	-	2062	2521	3016	3541
HB2NJ9232GM-1YMA1	CP: 400V-3ph-50Hz Fan: 230V-1ph-50Hz	4.2	25	-	-	1802	2287	2831	3424	4059	4725
			32	-	-	1608	2043	2534	3071	3648	4254
			38	-	-	-	1827	2275	2768	3297	3855
			43	-	-	-	-	2061	2518	3010	3529
HB2NTU6238GL1AMA1	CP: 230V-1ph-50Hz Fan: 230V-1ph-50Hz	16.7	25	-	-	2025	2510	3061	3655	4269	4882
			32	-	-	1841	2274	2764	3287	3825	4356
			38	-	-	-	2051	2488	2952	3424	3886
			43	-	-	-	-	2245	2659	3077	3482
HB2NJ9238GM-1YMA1	CP: 400V-3ph-50Hz Fan: 230V-1ph-50Hz	4.4	25	-	-	2258	2799	3378	3993	4644	5328
			32	-	-	1993	2476	3001	3565	4169	4809
			38	-	-	-	2192	2674	3198	3764	4368
			43	-	-	-	-	-	2896	3431	-
HB2NJX6250GM1YMA1	CP: 400V-3ph-50Hz Fan: 230V-1ph-50Hz	6.0	25	-	-	2952	3637	4410	5257	6162	7112
			32	-	-	2651	3266	3961	4721	5535	6388
			38	-	-	-	2933	3564	4254	4991	5764
			43	-	-	-	-	3233	3865	4541	5248
HB2ERF15-CB-1AMA1	CP: 230V-1ph-50Hz Fan: 230V-1ph-50Hz	14.3	25	2268	2804	3426	4141	4954	5919	6883	8002
			32	2089	2584	3158	3818	4568	5464	6359	7404
			38	1933	2392	2924	3536	4233	5070	5907	6888
			43	1801	2230	2726	3297	3950	4738	5525	6456
HB2ERF15-CA-1YMA1	CP: 400V-3ph-50Hz Fan: 230V-1ph-50Hz	5.7	25	2305	2848	3480	4205	5030	6008	6986	8119
			32	2122	2625	3207	3877	4638	5546	6453	7512
			38	1964	2430	2970	3591	4297	5145	5993	6988
			43	1830	2265	2769	3348	4010	4808	5606	6549
HB2ERF19-CB-1AMA1	CP: 230V-1ph-50Hz Fan: 230V-1ph-50Hz	16.6	25	2712	3346	4078	4916	5862	6977	8091	9548
			32	2496	3081	3756	4527	5400	6432	7463	8659
			38	2309	2851	3475	4189	4999	5961	6923	8046
			43	2150	2656	3237	3903	4661	5566	6470	7535

This table continues on the next page →

*MBP SH10 Tables
1. EN 13215 nominal conditions, Superheat 10K, Subcooling 3K, Midpoint evaporation temperature

MBP R448A/R449A SH10K

Condensing units			Amb. temp.	Cooling capacity (W) [1]*							
CDU Models	Voltage supply (V)	MCC comp + fan Max. Contin. Current [A]	(°C)	-25°C	-20°C	-15°C	-10°C	-5°C	0°C	+5°C	+10°C
HB2ERF19-CA-1YMA1	CP: 400V-3ph-50Hz Fan: 230V-1ph-50Hz	6.3	25	2780	3429	4178	5035	6002	7139	8276	9587
			32	2559	3157	3847	4635	5527	6580	7633	8853
			38	2366	2921	3560	4288	5116	6098	7079	8225
			43	2203	2721	3316	3996	4769	5692	6615	7702
HB2ERF21-CB-1AMA1	CP: 230V-1ph-50Hz Fan: 230V-1ph-50Hz	18.4	25	2780	3429	4178	5035	6002	7139	8276	9587
			32	2559	3157	3847	4635	5527	6580	7633	8853
			38	2366	2921	3560	4288	5116	6098	7079	8225
			43	2145	2721	3316	3996	4769	5692	6615	7702
HB2ERF21-CA-1YMA1	CP: 400V-3ph-50Hz Fan: 230V-1ph-50Hz	7.0	25	3127	3855	4697	5659	6744	8022	9300	10978
			32	2877	3550	4324	5209	6208	7389	8569	9940
			38	2661	3284	4000	4819	5745	6845	7945	9232
			43	2477	3059	3726	4488	5355	6052	6748	7895
HB2ERF26-CA-1YMA1	CP: 400V-3ph-50Hz Fan: 230V-1ph-50Hz	8.5	25	3833	4745	5809	7036	8437	10111	11784	13735
			32	3532	4376	5359	6492	7788	9344	10899	12723
			38	3269	4054	4965	6017	7221	8675	10128	11847
			43	3047	3780	4631	5614	6743	8112	9480	11111
HB2ERF30-CA-1YMA1	CP: 400V-3ph-50Hz Fan: 230V-1ph-50Hz	9.9	25	4609	5696	6958	8409	10056	12012	13967	16233
			32	4245	5249	6413	7751	9272	11086	12900	15015
			38	3927	4860	5939	7178	8591	10284	11977	13965
			43	3659	4530	5536	6693	8015	9609	11202	13087
HB2ERF37-CA-1YMA1	CP: 400V-3ph-50Hz Fan: 230V-1ph-50Hz	11.7	25	5446	6717	8187	9867	11768	13227	14686	17084
			32	4413	5465	6685	8087	9686	11594	13502	15736
			38	4057	5030	6155	7451	8929	10708	12486	14583
			43	3758	4663	5710	6917	8297	9968	11638	13623

*MBP SH10 Tables

1. EN 13215 nominal conditions, Superheat 10K, Subcooling 3K, Midpoint evaporation temperature

MBP R448A/R449A RTG20

Condensing units			Amb. temp.	Cooling capacity (W) [1*]								Eco design [2*]		Annual Energy Cons. [2*]
CDU Models	Voltage supply (V)	MCC comp + fan Max. Contin. Current [A]	(°C)	-25°C	-20°C	-15°C	-10°C	-5°C	0°C	+5°C	+10°C	Type	COP › 1.6 SEPR › 2.55	[kWh/y]
HB2NEU6212GL1AMA1	CP: 230V-1ph-50Hz Fan: 230V-1ph-50Hz	5.3	25	-	-	732	899	1094	1317	1568	1843	COP	1.81	-
			32	-	-	656	819	1006	1217	1449	1700			
			38	-	-	601	754	927	1119	1328	1553			
			43	-	-	-	694	851	1024	1211	1412			
HB2NEU6215GL1AMA1	CP: 230V-1ph-50Hz Fan: 230V-1ph-50Hz	6.7	25	-	-	991	1210	1461	1744	2056	2391	COP	1.88	-
			32	-	-	895	1104	1341	1603	1886	2188			
			38	-	-	824	1016	1231	1466	1719	1985			
			43	-	-	-	-	1126	1334	1556	1789			
HB2NT6222GL-1AMA1	CP: 230V-1ph-50Hz Fan: 230V-1ph-50Hz	8.5	25	-	-	1205	1485	1798	2138	2502	2885	COP	1.63	-
			32	-	-	1090	1342	1619	1919	2239	2574			
			38	-	-	-	1208	1452	1716	1996	2290			
			43	-	-	-	-	1300	1533	1780	2040			
HB2NT6224GL-1AMA1	CP: 230V-1ph-50Hz Fan: 230V-1ph-50Hz	9.0	25	-	-	1470	1834	2238	2677	3147	3645	COP	1.83	-
			32	-	-	1335	1660	2023	2420	2846	3300			
			38	-	-	1217	1511	1840	2201	2591	3007			
			43	-	-	-	-	1680	2013	2374	2759			
HB2NT6226GL-1AMA1	CP: 230V-1ph-50Hz Fan: 230V-1ph-50Hz	10.3	25	-	-	1617	2012	2461	2955	3488	4048	COP	1.93	-
			32	-	-	1473	1832	2237	2680	3154	3650			
			38	-	-	1350	1675	2038	2433	2853	3292			
			43	-	-	-	-	1859	2212	2586	2975			
HB2NJ9232GL-1AMA1	CP: 230V-1ph-50Hz Fan: 230V-1ph-50Hz	10.3	25	-	-	1830	2312	2853	3442	4071	4728	COP	1.96	-
			32	-	-	1642	2082	2574	3109	3676	4265			
			38	-	-	-	1884	2330	2812	3321	3849			
			43	-	-	-	-	2110	2547	3007	3481			
HB2NJ9232GM-1YMA1	CP: 400V-3ph-50Hz Fan: 230V-1ph-50Hz	4.2	25	-	-	1830	2311	2851	3439	4066	4719	COP	1.95	-
			32	-	-	1642	2082	2573	3106	3670	4254			
			38	-	-	-	1884	2328	2809	3315	3836			
			43	-	-	-	-	2109	2544	3000	3466			
HB2NTU6238GL1AMA1	CP: 230V-1ph-50Hz Fan: 230V-1ph-50Hz	16.7	25	-	-	2059	2541	3089	3676	4279	4874	COP	2.09	-
			32	-	-	1888	2322	2808	3323	3844	4352			
			38	-	-	-	2113	2543	2992	3441	3871			
			43	-	-	-	-	2297	2689	3077	3444			
HB2NJ9238GM-1YMA1	CP: 400V-3ph-50Hz Fan: 230V-1ph-50Hz	4.4	25	-	-	2292	2832	3410	4020	4661	5327	COP	1.97	-
			32	-	-	2044	2531	3055	3611	4195	4802			
			38	-	-	-	2263	2736	3240	3771	4323			
			43	-	-	-	-	-	2908	3393	-			
HB2NJX6250GM1YMA1	CP: 400V-3ph-50Hz Fan: 230V-1ph-50Hz	6.0	25	-	-	3002	3685	4453	5290	6180	7107	COP	1.96	-
			32	-	-	2715	3329	4018	4767	5562	6388			
			38	-	-	-	3011	3635	4311	5026	5766			
			43	-	-	-	-	3313	3929	4578	5248			
HB2ERF15-CB-1AMA1	CP: 230V-1ph-50Hz Fan: 230V-1ph-50Hz	14.3	25	2340	2882	3509	4225	5032	5978	6924	8002	COP	2.18	-
			32	-	2685	3265	3926	4670	5541	6412	7403			
			38	-	-	3052	3664	4354	5161	5968	6888			
			43	-	-	-	3443	4087	4842	5596	6456			
HB2ERF15-CA-1YMA1	CP: 400V-3ph-50Hz Fan: 230V-1ph-50Hz	5.7	25	2378	2929	3565	4291	5110	6069	7028	8119	COP	2.32	-
			32	-	2729	3317	3988	4742	5625	6507	7512			
			38	-	-	3101	3722	4421	5634	6846	6988			
			43	-	-	-	3497	4150	4914	5678	6549			
HB2ERF19-CB-1AMA1	CP: 230V-1ph-50Hz Fan: 230V-1ph-50Hz	16.6	25	2805	3448	4188	5028	5971	7060	8148	9548	COP	2.10	-
			32	-	3211	3895	4669	5536	6536	7535	8659			
			38	-	-	3639	4356	5156	6081	7006	8046			
			43	-	-	-	4091	4837	5701	6564	-			

This table continues on the next page →

*MBP RGT20 Tables
1. EN 13215 nominal conditions, Return Gas Temperature 20°C, Subcooling 3K, Subcooling 3K, Midpoint evaporation temperature
2. EN 13215 rated conditions, Return Gas Temperature 20°C, Subcooling 3K, Midpoint evaporation temperature -10°C

MBP R448A/R449A RTG20

Condensing units			Amb. temp.	Cooling capacity (W) 1*								Eco design 2*		Annual Energy Cons. 2*
CDU Models	Voltage supply (V)	MCC comp + fan Max. Contin. Current [A]	(°C)	-25°C	-20°C	-15°C	-10°C	-5°C	0°C	+5°C	+10°C	Type	COP › 1.6 SEPR › 2.55	[kWh/y]
HB2ERF19-CA-1YMA1	CP: 400V-3ph-50Hz Fan: 230V-1ph-50Hz	6.3	25	2876	3535	4292	5151	6114	7225	8336	9587	COP	2.29	-
			32	-	3292	3992	4783	5668	6688	7707	8853			
			38	-	-	3729	4461	5280	6223	7165	8225			
			43	-	-	-	4190	4951	5832	6712	-			
HB2ERF21-CB-1AMA1	CP: 230V-1ph-50Hz Fan: 230V-1ph-50Hz	18.4	25	3172	3900	4736	5686	6748	7977	9205	10588	SEPR	3.04	10667
			32	-	3632	4404	5277	6254	7381	8507	9774			
			38	-	-	4115	4923	5826	6867	7907	9079			
			43	-	-	-	4623	5465	6436	7406	8499			
HB2ERF21-CA-1YMA1	CP: 400V-3ph-50Hz Fan: 230V-1ph-50Hz	7.0	25	3234	3975	4826	5792	6872	8119	9366	10770	SEPR	3.26	10145
			32	-	3701	4487	5376	6368	7511	8654	9940			
			38	-	-	4192	5013	5931	6987	8043	9232			
			43	-	-	-	4708	5563	6548	7533	8642			
HB2ERF26-CA-1YMA1	CP: 400V-3ph-50Hz Fan: 230V-1ph-50Hz	8.5	25	4097	5006	6040	7163	8555	10063	11751	13623	SEPR	3.44	11630
			32	-	4868	5937	6660	7944	10199	11843	13735			
			38	-	-	5527	6221	7411	9460	10975	12723			
			43	-	-	5170	5847	6960	8818	10224	11847			
HB2ERF30-CA-1YMA1	CP: 400V-3ph-50Hz Fan: 230V-1ph-50Hz	9.9	25	4755	5856	7127	8580	10217	12134	14050	16233	SEPR	3.61	13712
			32	-	5456	6632	7972	9480	11244	13007	15015			
			38	-	-	6200	7441	8838	10471	12104	13965			
			43	-	-	-	6991	8295	9821	11347	13087			
HB2ERF37-CA-1YMA1	CP: 400V-3ph-50Hz Fan: 230V-1ph-50Hz	11.7	25	5631	6922	8407	10093	11984	14169	16354	18816	SEPR	3.52	15679
			32	-	6447	7818	9371	11107	13114	15120	17378			
			38	-	-	7304	8742	10346	12201	14056	16145			
			43	-	-	-	8209	9705	11436	13166	15116			

*MBP RGT20 Tables
1. EN 13215 nominal conditions, Return Gas Temperature 20°C, Subcooling 3K, Subcooling 3K, Midpoint evaporation temperature
2. EN 13215 rated conditions, Return Gas Temperature 20°C, Subcooling 3K, Midpoint evaporation temperature -10°C

Performance data

LBP Condensing Units



think ahead

embraco

Nidec



LBP R455A SH10K

Condensing units			Ambi. temp.	Cooling capacity (W) [1*]					
CDU Models	Voltage supply (V)	MCC comp + fan Max. Contin. Current [A]	(°C)	-35°C	-30°C	-25°C	-20°C	-15°C	-10°C
HB2NT2212GL-1ALA1	CP: 230V-1ph-50Hz Fan: 230V-1ph-50Hz	9.6	25	745	997	1302	1656	2054	2492
			32	638	868	1145	1463	1822	2215
			38	545	757	1005	1294	1617	1971
			43	469	661	887	1150	1443	1764
HB2NJX2219GM1YLA1	CP: 400V-3ph-50Hz Fan: 230V-1ph-50Hz	4.4	25	1162	1542	2003	2541	3149	3823
			32	1014	1363	1784	2274	2827	3440
			38	884	1202	1585	2031	2535	3092
			43	775	1064	1413	1820	2281	2792
HB2ELF07-CB-1ALA1	CP: 230V-1ph-50Hz Fan: 230V-1ph-50Hz	11.4	25	1459	1836	2281	2807	3421	4130
			32	1324	1669	2073	2548	3103	3747
			38	1207	1525	1895	2327	2832	3420
			43	1108	1404	1745	2142	2607	3149
HB2ELF07-CA-1YLA1	CP: 400V-3ph-50Hz Fan: 230V-1ph-50Hz	4.7	25	1486	1869	2322	2857	3481	4202
			32	1349	1700	2111	2594	3158	3812
			38	1230	1553	1929	2368	2882	3480
			43	1129	1430	1776	2180	2653	3203
HB2ELF08-CB-1ALA1	CP: 230V-1ph-50Hz Fan: 230V-1ph-50Hz	14.3	25	1763	2229	2778	3427	4187	5067
			32	1603	2028	2526	3113	3801	4599
			38	1463	1854	2309	2844	3471	4200
			43	1343	1707	2127	2619	3196	3869
HB2ELF08-CA-1YLA1	CP: 400V-3ph-50Hz Fan: 230V-1ph-50Hz	5.8	25	1813	2292	2855	3520	4299	5200
			32	1648	2085	2596	3198	3902	4720
			38	1504	1906	2373	2921	3564	4309
			43	1381	1755	2186	2690	3282	3970
HB2ELF09-CB-1ALA1	CP: 230V-1ph-50Hz Fan: 230V-1ph-50Hz	16.7	25	1992	2511	3124	3845	4686	5655
			32	1810	2284	2839	3492	4252	5131
			38	1650	2088	2595	3189	3882	4685
			43	1514	1922	2390	2936	3574	4315
HB2ELF09-CA-1YLA1	CP: 400V-3ph-50Hz Fan: 230V-1ph-50Hz	6.7	25	2035	2566	3191	3926	4783	5770
			32	1850	2334	2900	3565	4339	5234
			38	1687	2133	2651	3257	3962	4779
			43	1548	1963	2442	2999	3647	4401
HB2ELF12-CA-1YLA1	CP: 400V-3ph-50Hz Fan: 230V-1ph-50Hz	8.5	25	2464	3117	3893	4818	5910	7186
			32	2238	2837	3540	4377	5367	6525
			38	2042	2594	3237	4001	4903	5962
			43	1874	2389	2982	3685	4516	5495
HB2ELF13-CA-1YLA1	CP: 400V-3ph-50Hz Fan: 230V-1ph-50Hz	9.4	25	2958	3712	4599	5639	6847	8235
			32	2685	3374	4178	5117	6208	7466
			38	2448	3084	3817	4670	5663	6811
			43	2245	2837	3513	4297	5209	6263
HB2ELF17-CA-1YLA1	CP: 400V-3ph-50Hz Fan: 230V-1ph-50Hz	10.7	25	3550	4469	5557	6839	8335	10061
			32	3223	4065	5052	6210	7563	9126
			38	2939	3715	4617	5672	6904	8332
			43	2696	3420	4252	5223	6355	7672
HB2ELF20-CA-1YLA1	CP: 400V-3ph-50Hz Fan: 230V-1ph-50Hz	12.3	25	4290	5386	6675	8183	9929	11927
			32	3894	4897	6065	7426	9001	10810
			38	3549	4474	5541	6779	8211	9861
			43	3256	4117	5101	6237	7555	9074

*LBP SH10 Tables
1. EN 13215 nominal conditions, Superheat 10K, Subcooling 3K, Midpoint evaporation temperature

LBP R455A RTG20

Condensing units			Amb. temp.	Cooling capacity (W) [1*]						Eco design [2*]		Annual Energy Cons. [2*]
CDU Models	Voltage supply (V)	MCC comp + fan Max. Contin. Current [A]	(°C)	-35°C	-30°C	-25°C	-20°C	-15°C	-10°C	Type	COP › 0.95 SEPR › 1.6	[kWh/y]
HB2NT2212GL-1ALA1	CP: 230V-1ph-50Hz Fan: 230V-1ph-50Hz	9.6	25	785	1049	1361	1723	2127	2567	COP	0.96	-
			32	684	926	1213	1542	1906	2301			
			38	595	817	1080	1379	1709	2065			
			43	520	724	965	1239	1540	1863			
HB2NJX2219GM1YLA1	CP: 400V-3ph-50Hz Fan: 230V-1ph-50Hz	4.4	25	1225	1619	2094	2642	3258	3934	COP	1.06	-
			32	1088	1455	1891	2394	2957	3570			
			38	965	1304	1703	2164	2678	3238			
			43	861	1171	1539	1962	2434	2947			
HB2ELF07-CB-1ALA1	CP: 230V-1ph-50Hz Fan: 230V-1ph-50Hz	11.4	25	1543	1930	2386	2921	3542	4254	COP	1.07	-
			32	1427	1783	2199	2685	3247	3892			
			38	1324	1655	2038	2481	2994	3582			
			43	1236	1548	1903	2311	2783	3325			
HB2ELF07-CA-1YLA1	CP: 400V-3ph-50Hz Fan: 230V-1ph-50Hz	4.7	25	1571	1966	2430	2974	3605	4328	COP	1.15	-
			32	1453	1816	2240	2733	3305	3960			
			38	1349	1686	2075	2526	3048	3645			
			43	1260	1576	1937	2353	2833	3383			
HB2ELF08-CB-1ALA1	CP: 230V-1ph-50Hz Fan: 230V-1ph-50Hz	14.3	25	1862	2338	2899	3558	4327	5209	COP	1.07	-
			32	1722	2161	2672	3271	3967	4767			
			38	1598	2008	2476	3024	3659	4390			
			43	1493	1878	2312	2817	3403	4077			
HB2ELF08-CA-1YLA1	CP: 400V-3ph-50Hz Fan: 230V-1ph-50Hz	5.8	25	1915	2404	2980	3657	4444	5348	COP	1.18	-
			32	1771	2222	2747	3361	4075	4894			
			38	1644	2065	2546	3108	3759	4507			
			43	1535	1931	2377	2895	3495	4185			
HB2ELF09-CB-1ALA1	CP: 230V-1ph-50Hz Fan: 230V-1ph-50Hz	16.7	25	2104	2638	3265	4000	4852	5826	COP	1.12	-
			32	1945	2436	3009	3676	4448	5331			
			38	1806	2262	2789	3399	4103	4907			
			43	1686	2115	2603	3166	3815	4557			
HB2ELF09-CA-1YLA1	CP: 400V-3ph-50Hz Fan: 230V-1ph-50Hz	6.7	25	2150	2696	3336	4086	4954	5945	COP	1.22	-
			32	1988	2490	3074	3755	4541	5440			
			38	1846	2312	2849	3471	4189	5009			
			43	1724	2161	2660	3234	3895	4649			
HB2ELF12-CA-1YLA1	CP: 400V-3ph-50Hz Fan: 230V-1ph-50Hz	8.5	25	2599	3263	4053	4989	6089	7363	SEPR	1.71	8637
			32	2401	3015	3742	4586	5583	6740			
			38	2229	2800	3469	4240	5151	6208			
			43	2080	2618	3238	3951	4790	5766			
HB2ELF13-CA-1YLA1	CP: 400V-3ph-50Hz Fan: 230V-1ph-50Hz	9.4	25	3134	3914	4826	5888	7112	8504	SEPR	1.91	11281
			32	2894	3615	4447	5409	6517	7775			
			38	2686	3357	4121	4999	6007	7155			
			43	2508	3137	3846	4655	5583	6639			
HB2ELF17-CA-1YLA1	CP: 400V-3ph-50Hz Fan: 230V-1ph-50Hz	10.7	25	3754	4696	5811	7117	8631	10361	SEPR	1.95	13233
			32	3468	4338	5355	6541	7911	9480			
			38	3219	4028	4964	6046	7297	8728			
			43	3005	3765	4633	5633	6784	8104			
HB2ELF20-CA-1YLA1	CP: 400V-3ph-50Hz Fan: 230V-1ph-50Hz	12.3	25	4542	5676	7003	8546	10319	12329	SEPR	1.86	13834
			32	4196	5242	6453	7852	9456	11274			
			38	3893	4868	5979	7257	8719	10373			
			43	3635	4549	5581	6759	8104	9627			

*LBP RGT20 Tables
1. EN 13215 nominal conditions, Return Gas Temperature 20°C, Subcooling 3K, Midpoint evaporation temperature
2. EN 13215 rated conditions, Return Gas Temperature 20°C, Subcooling 3K, Midpoint evaporation temperature -35°C

LBP R452A SH10K

Condensing units			Amb. temp.	Cooling capacity (W) [1*]					
CDU Models	Voltage supply (V)	MCC comp + fan Max. Contin. Current [A]	(°C)	-35°C	-30°C	-25°C	-20°C	-15°C	-10°C
HB2NT2212GL-1ALA1	CP: 230V-1ph-50Hz Fan: 230V-1ph-50Hz	9.6	25	814	1038	1314	1643	2023	2451
			32	693	899	1149	1445	1785	2165
			38	589	777	1003	1269	1572	1912
			43	-	677	882	1121	1394	1699
HB2NJX2219GM1YLA1	CP: 400V-3ph-50Hz Fan: 230V-1ph-50Hz	4.4	25	1118	1478	1922	2442	3030	3677
			32	1016	1338	1730	2189	2706	3274
			38	896	1186	1537	1945	2405	2908
			43	783	1047	1365	1733	2146	2597
HB2ELF07-CB-1ALA1	CP: 230V-1ph-50Hz Fan: 230V-1ph-50Hz	11.4	25	1471	1845	2287	2804	3407	4100
			32	1326	1665	2064	2531	3074	3699
			38	1199	1508	1869	2291	2783	3350
			43	1091	1374	1702	2086	2533	3055
HB2ELF07-CA-1YLA1	CP: 400V-3ph-50Hz Fan: 230V-1ph-50Hz	4.7	25	1489	1868	2314	2838	3447	4148
			32	1342	1686	2089	2561	3110	3742
			38	1214	1527	1892	2318	2815	3389
			43	1104	1391	1723	2111	2563	3089
HB2ELF08-CB-1ALA1	CP: 230V-1ph-50Hz Fan: 230V-1ph-50Hz	14.3	25	1799	2259	2804	3444	4190	5049
			32	1622	2041	2533	3110	3781	4558
			38	1467	1849	2295	2817	3425	4131
			43	1336	1686	2092	2567	3123	3769
HB2ELF08-CA-1YLA1	CP: 400V-3ph-50Hz Fan: 230V-1ph-50Hz	5.8	25	2017	2509	3084	3752	4519	5391
			32	1863	2316	2841	3447	4141	4928
			38	1730	2148	2628	3178	3808	4521
			43	1617	2004	2445	2949	3525	4177
HB2ELF09-CB-1ALA1	CP: 230V-1ph-50Hz Fan: 230V-1ph-50Hz	16.7	25	2016	2529	3134	3842	4664	5608
			32	1816	2282	2829	3466	4206	5057
			38	1643	2067	2561	3137	3806	4578
			43	1496	1884	2333	2857	3466	4174
HB2ELF09-CA-1YLA1	CP: 400V-3ph-50Hz Fan: 230V-1ph-50Hz	6.7	25	2045	2565	3179	3896	4730	5686
			32	1842	2315	2869	3515	4265	5126
			38	1667	2097	2597	3181	3859	4640
			43	1517	1911	2366	2897	3513	4229
HB2ELF12-CA-1YLA1	CP: 400V-3ph-50Hz Fan: 230V-1ph-50Hz	8.5	25	2499	3145	3913	4822	5886	7123
			32	2254	2844	3540	4361	5325	6446
			38	2041	2580	3212	3956	4831	5853
			43	1860	2354	2931	3610	4410	5349
HB2ELF13-CA-1YLA1	CP: 400V-3ph-50Hz Fan: 230V-1ph-50Hz	9.4	25	2944	3685	4556	5572	6749	8093
			32	2651	3323	4109	5023	6081	7292
			38	2396	3007	3716	4541	5494	6594
			43	2179	2737	3381	4129	4997	6003
HB2ELF17-CA-1YLA1	CP: 400V-3ph-50Hz Fan: 230V-1ph-50Hz	10.7	25	3547	4449	5514	6763	8212	9881
			32	3195	4016	4978	6103	7408	8914
			38	2890	3638	4508	5523	6705	8069
			43	2632	3315	4107	5031	6108	7356
HB2ELF20-CA-1YLA1	CP: 400V-3ph-50Hz Fan: 230V-1ph-50Hz	12.3	25	4253	5325	6582	8045	9736	11661
			32	3829	4802	5934	7248	8764	10497
			38	3461	4345	5366	6550	7916	9486
			43	3149	3954	4882	5958	7200	8634

*LBP SH10 Tables
1. EN 13215 nominal conditions, Superheat 10K, Subcooling 3K, Midpoint evaporation temperature

LBP R452A RTG20

Condensing units			Amb. temp.	Cooling capacity (W) [1]*						Eco design [2]*		Annual Energy Cons. [2]*
CDU Models	Voltage supply (V)	MCC comp + fan Max. Contin. Current [A]	(°C)	-35°C	-30°C	-25°C	-20°C	-15°C	-10°C	Type	COP › 0.95 SEPR › 1.6	[kWh/y]
HB2NT2212GL-1ALA1	CP: 230V-1ph-50Hz Fan: 230V-1ph-50Hz	9.6	25	890	1122	1406	1740	2121	2544	COP	1.08	-
			32	773	990	1251	1553	1895	2271			
			38	673	874	1113	1386	1692	2028			
			43	-	780	998	1245	1521	1821			
HB2NJX2219GM1YLA1	CP: 400V-3ph-50Hz Fan: 230V-1ph-50Hz	4.4	25	1231	1604	2059	2586	3174	3812	COP	1.08	-
			32	1129	1468	1876	2346	2866	3427			
			38	1018	1328	1698	2119	2582	3079			
			43	913	1200	1538	1920	2336	2780			
HB2ELF07-CB-1ALA1	CP: 230V-1ph-50Hz Fan: 230V-1ph-50Hz	11.4	25	1623	2016	2475	3007	3617	4307	COP	1.18	-
			32	1499	1861	2280	2762	3312	3936			
			38	1392	1726	2108	2545	3045	3611			
			43	1300	1609	1960	2360	2817	3335			
HB2ELF07-CA-1YLA1	CP: 400V-3ph-50Hz Fan: 230V-1ph-50Hz	4.7	25	1643	2041	2505	3043	3660	4357	COP	1.25	-
			32	1517	1884	2307	2795	3352	3982			
			38	1409	1747	2133	2576	3081	3653			
			43	1317	1629	1984	2388	2850	3374			
HB2ELF08-CB-1ALA1	CP: 230V-1ph-50Hz Fan: 230V-1ph-50Hz	14.3	25	1980	2463	3028	3684	4439	5297	COP	1.20	-
			32	1829	2274	2790	3385	4068	4842			
			38	1698	2109	2580	3122	3741	4443			
			43	1587	1968	2400	2896	3463	4106			
HB2ELF08-CA-1YLA1	CP: 400V-3ph-50Hz Fan: 230V-1ph-50Hz	5.8	25	2017	2509	3084	3752	4519	5391	COP	1.30	-
			32	1863	2316	2841	3447	4141	4928			
			38	1730	2148	2628	3178	3808	4521			
			43	1617	2004	2445	2949	3525	4177			
HB2ELF09-CB-1ALA1	CP: 230V-1ph-50Hz Fan: 230V-1ph-50Hz	16.7	25	2223	2762	3392	4120	4955	5898	SEPR	1.82	8418
			32	2053	2550	3124	3784	4537	5387			
			38	1906	2364	2888	3488	4170	4941			
			43	1781	2205	2686	3234	3858	4563			
HB2ELF09-CA-1YLA1	CP: 400V-3ph-50Hz Fan: 230V-1ph-50Hz	6.7	25	2256	2803	3441	4180	5025	5980	SEPR	1.94	8014
			32	2083	2588	3169	3838	4600	5462			
			38	1934	2399	2930	3538	4228	5009			
			43	1807	2237	2725	3280	3912	4626			
HB2ELF12-CA-1YLA1	CP: 400V-3ph-50Hz Fan: 230V-1ph-50Hz	8.5	25	2739	3414	4207	5134	6208	7438	SEPR	1.85	8384
			32	2530	3155	3880	4723	5696	6810			
			38	2350	2926	3591	4359	5244	6259			
			43	2197	2731	3342	4046	4858	5789			
HB2ELF13-CA-1YLA1	CP: 400V-3ph-50Hz Fan: 230V-1ph-50Hz	9.4	25	3257	4039	4947	5994	7186	8527	SEPR	2.00	11185
			32	3008	3728	4554	5501	6576	7786			
			38	2792	3455	4208	5067	6041	7136			
			43	2608	3221	3911	4696	5584	6580			
HB2ELF17-CA-1YLA1	CP: 400V-3ph-50Hz Fan: 230V-1ph-50Hz	10.7	25	3910	4858	5965	7248	8718	10383	SEPR	2.06	13078
			32	3611	4485	5495	6657	7985	9484			
			38	3352	4158	5080	6136	7341	8700			
			43	3132	3879	4725	5691	6790	8035			
HB2ELF20-CA-1YLA1	CP: 400V-3ph-50Hz Fan: 230V-1ph-50Hz	12.3	25	4707	5839	7152	8664	10382	12309	SEPR	1.93	13827
			32	4346	5388	6583	7949	9495	11229			
			38	4034	4993	6082	7321	8720	10287			
			43	3769	4655	5654	6784	8061	9491			

*LBP RGT20 Tables
1. EN 13215 nominal conditions, Return Gas Temperature 20°C, Subcooling 3K, Midpoint evaporation temperature
2. EN 13215 rated conditions, Return Gas Temperature 20°C, Subcooling 3K, Midpoint evaporation temperature -35°C

LBP R454C SH10K

Condensing units			Amb. temp.	Cooling capacity (W) [1*]					
CDU Models	Voltage supply (V)	MCC comp + fan Max. Contin. Current [A]	(°C)	-35°C	-30°C	-25°C	-20°C	-15°C	-10°C
HB2NT2212GL-1ALA1	CP: 230V-1ph-50Hz Fan: 230V-1ph-50Hz	9.6	25	689	910	1178	1490	1848	2250
			32	587	790	1035	1321	1647	2014
			38	502	691	917	1180	1479	1816
			43	435	612	822	1065	1343	1654
HB2NJX2219GM1YLA1	CP: 400V-3ph-50Hz Fan: 230V-1ph-50Hz	4.4	25	1072	1415	1830	2314	2864	3475
			32	938	1246	1621	2061	2563	3123
			38	822	1104	1447	1850	2312	2831
			43	728	986	1304	1679	2110	2596
HB2ELF07-CB-1ALA1	CP: 230V-1ph-50Hz Fan: 230V-1ph-50Hz	11.4	25	1298	1635	2036	2511	3072	3726
			32	1183	1494	1859	2290	2798	3391
			38	1083	1372	1707	2100	2563	3105
			43	998	1268	1578	1940	2366	2865
HB2ELF07-CA-1YLA1	CP: 400V-3ph-50Hz Fan: 230V-1ph-50Hz	4.7	25	1327	1671	2080	2566	3138	3804
			32	1209	1527	1900	2340	2857	3463
			38	1108	1402	1744	2145	2617	3170
			43	1021	1296	1612	1981	2416	2925
HB2ELF08-CB-1ALA1	CP: 230V-1ph-50Hz Fan: 230V-1ph-50Hz	14.3	25	1572	1984	2475	3060	3750	4557
			32	1433	1813	2261	2791	3417	4149
			38	1312	1665	2077	2561	3132	3801
			43	1209	1540	1921	2367	2892	3511
HB2ELF08-CA-1YLA1	CP: 400V-3ph-50Hz Fan: 230V-1ph-50Hz	5.8	25	1621	2045	2550	3152	3861	4689
			32	1477	1869	2330	2875	3518	4270
			38	1353	1717	2140	2637	3224	3910
			43	1247	1587	1979	2438	2978	3611
HB2ELF09-CB-1ALA1	CP: 230V-1ph-50Hz Fan: 230V-1ph-50Hz	16.7	25	1772	2234	2783	3434	4200	5092
			32	1615	2041	2542	3132	3825	4634
			38	1479	1875	2334	2872	3504	4243
			43	1363	1733	2158	2654	3236	3917
HB2ELF09-CA-1YLA1	CP: 400V-3ph-50Hz Fan: 230V-1ph-50Hz	6.7	25	1817	2290	2853	3519	4302	5213
			32	1657	2093	2605	3209	3918	4744
			38	1517	1922	2392	2943	3589	4344
			43	1398	1777	2212	2719	3314	4009
HB2ELF12-CA-1YLA1	CP: 400V-3ph-50Hz Fan: 230V-1ph-50Hz	8.5	25	2205	2787	3485	4321	5314	6482
			32	2011	2548	3186	3945	4846	5907
			38	1842	2341	2927	3620	4443	5415
			43	1698	2165	2708	3348	4106	5005
HB2ELF13-CA-1YLA1	CP: 400V-3ph-50Hz Fan: 230V-1ph-50Hz	9.4	25	2632	3308	4109	5054	6163	7450
			32	2399	3023	3751	4607	5610	6776
			38	2196	2774	3441	4221	5134	6197
			43	2022	2563	3180	3897	4736	5716
HB2ELF17-CA-1YLA1	CP: 400V-3ph-50Hz Fan: 230V-1ph-50Hz	10.7	25	3163	3987	4965	6126	7493	9084
			32	2884	3644	4535	5587	6825	8268
			38	2640	3346	4164	5124	6251	7570
			43	2433	3093	3850	4734	5772	6989
HB2ELF20-CA-1YLA1	CP: 400V-3ph-50Hz Fan: 230V-1ph-50Hz	12.3	25	3818	4802	5964	7335	8939	10793
			32	3480	4386	5444	6685	8133	9813
			38	3185	4025	4995	6125	7444	8976
			43	2934	3720	4616	5656	6869	8277

*LBP SH10 Tables
1. EN 13215 nominal conditions, Superheat 10K, Subcooling 3K, Midpoint evaporation temperature

LBP R454C RTG20

Condensing units			Amb. temp.	Cooling capacity (W) [1]*						Eco design [2]*		Annual Energy Cons. [2]*
CDU Models	Voltage supply (V)	MCC comp + fan Max. Contin. Current [A]	(°C)	-35°C	-30°C	-25°C	-20°C	-15°C	-10°C	Type	COP › 0.95 SEPR › 1.6	[kWh/y]
HB2NT2212GL-1ALA1	CP: 230V-1ph-50Hz Fan: 230V-1ph-50Hz	9.6	25	733	962	1239	1559	1922	2324	COP	0.96	-
			32	633	847	1103	1398	1730	2097			
			38	551	753	991	1264	1569	1907			
			43	486	678	900	1154	1438	1751			
HB2NJX2219GM1YLA1	CP: 400V-3ph-50Hz Fan: 230V-1ph-50Hz	4.4	25	1138	1496	1925	2420	2977	3588	COP	1.08	-
			32	1015	1338	1729	2181	2690	3251			
			38	906	1204	1564	1982	2453	2972			
			43	813	1092	1429	1819	2260	2747			
HB2ELF07-CB-1ALA1	CP: 230V-1ph-50Hz Fan: 230V-1ph-50Hz	11.4	25	1381	1729	2140	2624	3191	3846	COP	1.10	-
			32	1281	1606	1983	2423	2937	3532			
			38	1195	1499	1846	2250	2719	3261			
			43	1121	1408	1732	2105	2537	3036			
HB2ELF07-CA-1YLA1	CP: 400V-3ph-50Hz Fan: 230V-1ph-50Hz	4.7	25	1412	1768	2188	2682	3260	3927	COP	1.19	-
			32	1310	1642	2027	2476	3001	3606			
			38	1222	1532	1887	2299	2778	3330			
			43	1147	1439	1770	2151	2591	3100			
HB2ELF08-CB-1ALA1	CP: 230V-1ph-50Hz Fan: 230V-1ph-50Hz	14.3	25	1669	2093	2596	3191	3888	4696	COP	1.09	-
			32	1550	1944	2405	2947	3581	4313			
			38	1446	1815	2241	2738	3316	3986			
			43	1357	1705	2102	2561	3095	3712			
HB2ELF08-CA-1YLA1	CP: 400V-3ph-50Hz Fan: 230V-1ph-50Hz	5.8	25	1539	1936	2403	2955	3604	4358	COP	1.14	-
			32	1438	1813	2247	2754	3347	4035			
			38	1350	1705	2110	2578	3124	3755			
			43	1273	1612	1992	2428	2933	3518			
HB2ELF09-CB-1ALA1	CP: 230V-1ph-50Hz Fan: 230V-1ph-50Hz	16.7	25	1883	2360	2924	3588	4363	5257	COP	1.15	-
			32	1748	2192	2709	3313	4017	4828			
			38	1630	2046	2523	3077	3719	4459			
			43	1529	1922	2366	2878	3470	4152			
HB2ELF09-CA-1YLA1	CP: 400V-3ph-50Hz Fan: 230V-1ph-50Hz	6.7	25	1932	2421	2998	3677	4470	5384	COP	1.27	-
			32	1793	2248	2777	3396	4115	4943			
			38	1672	2098	2587	3153	3810	4566			
			43	1569	1971	2426	2950	3555	4251			
HB2ELF12-CA-1YLA1	CP: 400V-3ph-50Hz Fan: 230V-1ph-50Hz	8.5	25	2336	2938	3647	4494	5494	6660	SEPR	1.81	8905
			32	2168	2729	3380	4152	5061	6121			
			38	2022	2548	3149	3858	4689	5658			
			43	1897	2393	2954	3609	4376	5271			
HB2ELF13-CA-1YLA1	CP: 400V-3ph-50Hz Fan: 230V-1ph-50Hz	9.4	25	2805	3507	4331	5296	6419	7708	SEPR	1.94	10043
			32	2603	3256	4011	4889	5907	7073			
			38	2428	3040	3736	4539	5466	6530			
			43	2278	2855	3503	4244	5097	6077			
HB2ELF17-CA-1YLA1	CP: 400V-3ph-50Hz Fan: 230V-1ph-50Hz	10.7	25	3362	4213	5218	6401	7783	9377	SEPR	1.98	11761
			32	3121	3913	4834	5911	7165	8611			
			38	2910	3653	4503	5490	6634	7954			
			43	2731	3431	4223	5134	6190	7406			
HB2ELF20-CA-1YLA1	CP: 400V-3ph-50Hz Fan: 230V-1ph-50Hz	12.3	25	4068	5088	6286	7689	9315	11178	SEPR	2.00	14178
			32	3776	4725	5823	7098	8572	10257			
			38	3521	4410	5422	6589	7933	9467			
			43	3303	4141	5083	6161	7398	8810			

*LBP RGT20 Tables
1. EN 13215 nominal conditions, Return Gas Temperature 20°C, Subcooling 3K, Midpoint evaporation temperature
2. EN 13215 rated conditions, Return Gas Temperature 20°C, Subcooling 3K, Midpoint evaporation temperature -35°C

LBP R448A/R449A SH10K

Condensing units			Amb. temp.	Cooling capacity (W) [1]*					
CDU Models	Voltage supply (V)	MCC comp + fan Max. Contin. Current [A]	(°C)	-35°C	-30°C	-25°C	-20°C	-15°C	-10°C
HB2ELF07-CB-1ALA1	CP: 230V-1ph-50Hz Fan: 230V-1ph-50Hz	11.4	25	1444	1817	2259	2783	3397	4110
			32	1327	1671	2075	2552	3110	3761
			38	1226	1544	1915	2350	2860	3457
			43	1138	1435	1777	2177	2648	3198
HB2ELF07-CA-1YLA1	CP: 400V-3ph-50Hz Fan: 230V-1ph-50Hz	4.7	25	1468	1847	2295	2826	3450	4174
			32	1349	1698	2108	2592	3158	3818
			38	1245	1569	1945	2386	2904	3509
			43	1157	1458	1805	2211	2689	3246
HB2ELF08-CB-1ALA1	CP: 230V-1ph-50Hz Fan: 230V-1ph-50Hz	14.3	25	1754	2209	2751	3394	4149	5029
			32	1612	2033	2529	3114	3801	4602
			38	1489	1879	2334	2869	3498	4232
			43	1383	1747	2167	2660	3240	3919
HB2ELF08-CA-1YLA1	CP: 400V-3ph-50Hz Fan: 230V-1ph-50Hz	5.8	25	1799	2266	2821	3478	4251	5150
			32	1653	2085	2592	3191	3894	4712
			38	1527	1927	2392	2940	3583	4332
			43	1418	1791	2221	2726	3319	4012
HB2ELF09-CB-1ALA1	CP: 230V-1ph-50Hz Fan: 230V-1ph-50Hz	16.7	25	1975	2485	3090	3805	4642	5614
			32	1815	2286	2839	3489	4250	5134
			38	1675	2112	2619	3213	3908	4718
			43	1557	1963	2431	2978	3619	4366
HB2ELF09-CA-1YLA1	CP: 400V-3ph-50Hz Fan: 230V-1ph-50Hz	6.7	25	2013	2533	3149	3877	4729	5716
			32	1850	2330	2893	3555	4329	5227
			38	1708	2152	2669	3273	3980	4803
			43	1586	2000	2477	3033	3685	4444
HB2ELF12-CA-1YLA1	CP: 230V-1ph-50Hz Fan: 230V-1ph-50Hz	8.5	25	2450	3094	3862	4778	5863	7133
			32	2253	2849	3554	4390	5378	6538
			38	2081	2634	3282	4048	4953	6019
			43	1934	2450	3050	3756	4592	5580
HB2ELF13-CA-1YLA1	CP: 400V-3ph-50Hz Fan: 230V-1ph-50Hz	9.4	25	2916	3662	4543	5580	6790	8191
			32	2680	3368	4172	5113	6212	7486
			38	2473	3109	3845	4704	5707	6870
			43	2295	2887	3566	4356	5278	6353
HB2ELF17-CA-1YLA1	CP: 400V-3ph-50Hz Fan: 230V-1ph-50Hz	10.7	25	3505	4411	5486	6756	8245	9972
			32	3222	4059	5041	6196	7549	9121
			38	2974	3749	4650	5705	6942	8382
			43	2763	3484	4316	5288	6427	7759
HB2ELF20-CA-1YLA1	CP: 400V-3ph-50Hz Fan: 230V-1ph-50Hz	12.3	25	4222	5301	6575	8072	9814	11823
			32	3878	4874	6035	7394	8974	10798
			38	3578	4499	5563	6801	8243	9908
			43	3322	4179	5159	6298	7625	9161

*LBP SH10 Tables
1. EN 13215 nominal conditions, Superheat 10K, Subcooling 3K, Midpoint evaporation temperature

LBP R448A/R449A SH10K

Condensing units			Amb. temp.	Cooling capacity (W) [1*]						Eco design [2*]		Annual Energy Cons. [2*]
CDU Models	Voltage supply (V)	MCC comp + fan Max. Contin. Current [A]	(°C)	-35°C	-30°C	-25°C	-20°C	-15°C	-10°C	Type	COP ≥ 0.95 SEPR ≥ 1.6	[kWh/y]
HB2ELF07-CB-1ALA1	CP: 230V-1ph-50Hz Fan: 230V-1ph-50Hz	11.4	25	1503	1886	2337	2869	3490	4207	COP	1.10	-
			32	1403	1760	2175	2661	3227	3881			
			38	1316	1649	2033	2478	2997	3595			
			43	1242	1554	1910	2322	2800	3353			
HB2ELF07-CA-1YLA1	CP: 400V-3ph-50Hz Fan: 230V-1ph-50Hz	4.7	25	1528	1916	2375	2915	3545	4272	COP	1.16	-
			32	1426	1788	2210	2703	3278	3941			
			38	1338	1675	2065	2517	3043	3650			
			43	1262	1579	1941	2359	2844	3404			
HB2ELF08-CB-1ALA1	CP: 230V-1ph-50Hz Fan: 230V-1ph-50Hz	14.3	25	1822	2288	2841	3493	4257	5140	COP	1.11	-
			32	1701	2136	2644	3241	3938	4743			
			38	1595	2002	2472	3020	3658	4396			
			43	1505	1887	2324	2831	3420	4103			
HB2ELF08-CA-1YLA1	CP: 400V-3ph-50Hz Fan: 230V-1ph-50Hz	5.8	25	1869	2347	2913	3582	4363	5265	COP	1.21	-
			32	1745	2191	2712	3323	4035	4858			
			38	1637	2054	2534	3095	3748	4502			
			43	1544	1935	2383	2901	3504	4201			
HB2ELF09-CB-1ALA1	CP: 230V-1ph-50Hz Fan: 230V-1ph-50Hz	16.7	25	2054	2578	3196	3924	4773	5750	COP	1.16	-
			32	1918	2406	2975	3640	4413	5301			
			38	1799	2254	2779	3390	4098	4911			
			43	1697	2124	2612	3176	3829	4582			
HB2ELF09-CA-1YLA1	CP: 400V-3ph-50Hz Fan: 230V-1ph-50Hz	6.7	25	2095	2628	3258	3999	4863	5856	COP	1.25	-
			32	1956	2453	3032	3709	4495	5399			
			38	1834	2298	2833	3454	4174	5001			
			43	1730	2166	2662	3236	3901	4665			
HB2ELF12-CA-1YLA1	CP: 230V-1ph-50Hz Fan: 230V-1ph-50Hz	8.5	25	2538	3195	3976	4903	5995	7267	SEPR	1.78	9916
			32	2370	2983	3703	4552	5550	6712			
			38	2223	2797	3463	4244	5160	6227			
			43	2097	2636	3256	3980	4827	5815			
HB2ELF13-CA-1YLA1	CP: 400V-3ph-50Hz Fan: 230V-1ph-50Hz	9.4	25	3042	3810	4712	5769	6997	8404	SEPR	1.90	11214
			32	2839	3555	4383	5348	6464	7744			
			38	2663	3330	4095	4978	5999	7169			
			43	2511	3137	3846	4662	5603	6683			
HB2ELF17-CA-1YLA1	CP: 400V-3ph-50Hz Fan: 230V-1ph-50Hz	10.7	25	3646	4576	5673	6966	8474	10210	SEPR	1.95	13116
			32	3405	4271	5281	6461	7834	9416			
			38	3193	4002	4934	6018	7275	8723			
			43	3012	3771	4637	5638	6799	8137			
HB2ELF20-CA-1YLA1	CP: 400V-3ph-50Hz Fan: 230V-1ph-50Hz	12.3	25	4402	5514	6821	8351	10122	12146	SEPR	1.93	16026
			32	4110	5145	6345	7740	9351	11187			
			38	3853	4819	5926	7204	8676	10355			
			43	3634	4539	5566	6746	8102	9652			

*LBP RGT20 Tables
1. EN 13215 nominal conditions, Return Gas Temperature 20°C, Subcooling 3K, Midpoint evaporation temperature
2. EN 13215 rated conditions, Return Gas Temperature 20°C, Subcooling 3K, Midpoint evaporation temperature -35°C

Operational Limits

A1 refrigerants

RECIPROCATING MBP

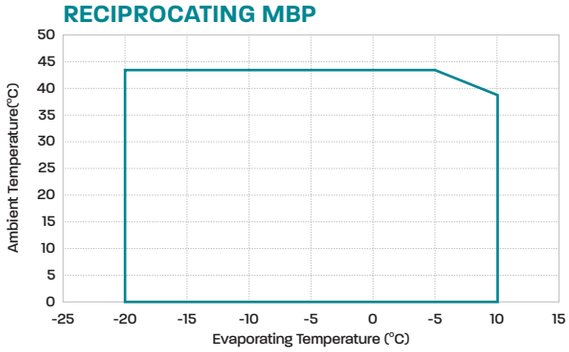

RECIPROCATING LBP

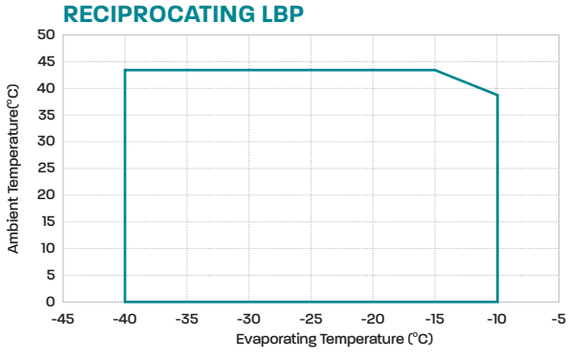

SCROLL MBP

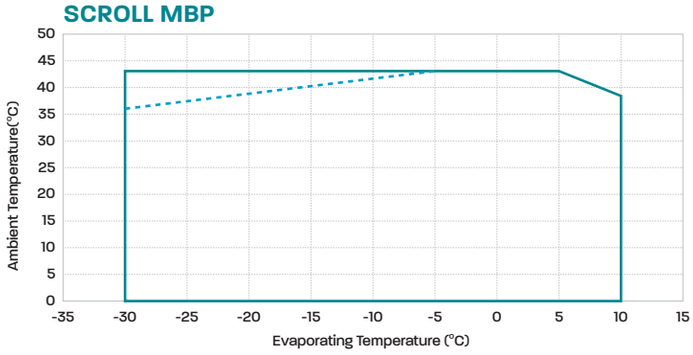

SCROLL LBP

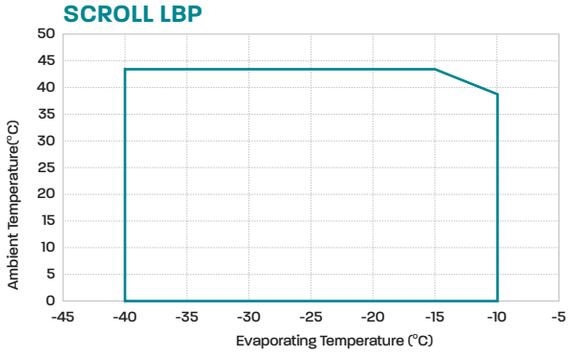

A2L refrigerants

RECIPROCATING MBP

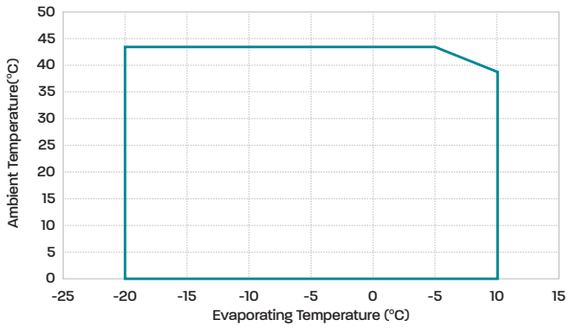

RECIPROCATING LBP

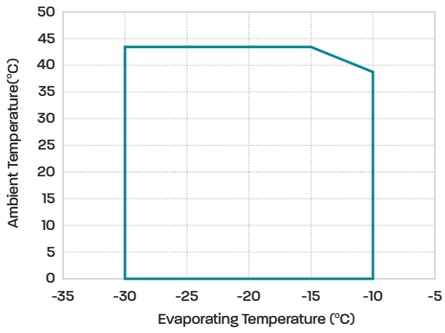

SCROLL MBP

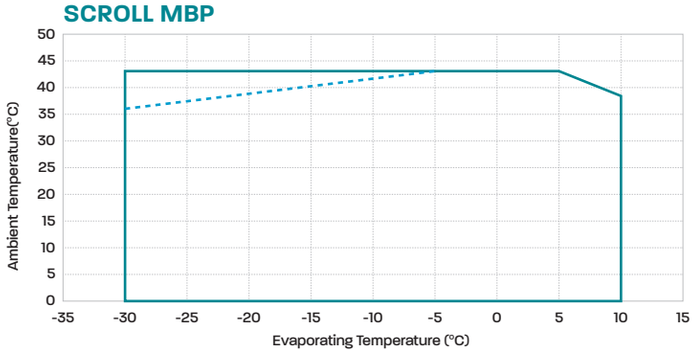

SCROLL LBP

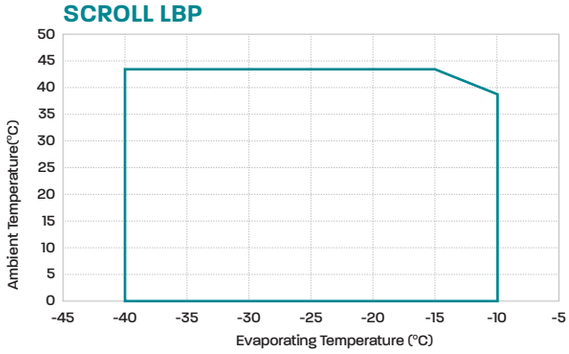

External Views

Model Housing 1



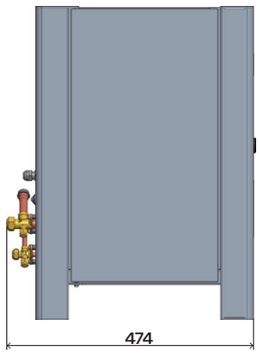

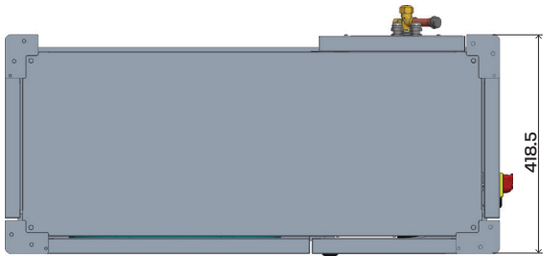

Model Housing 2

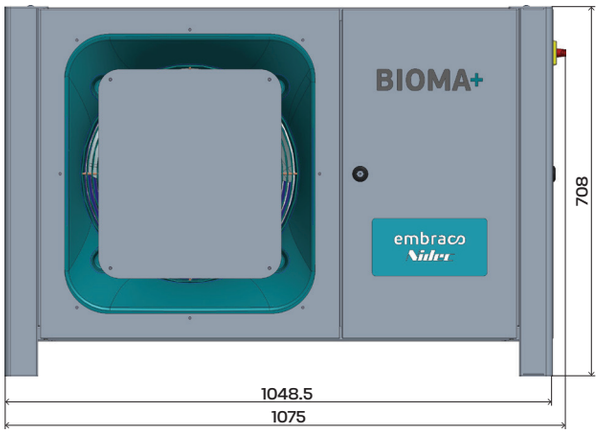

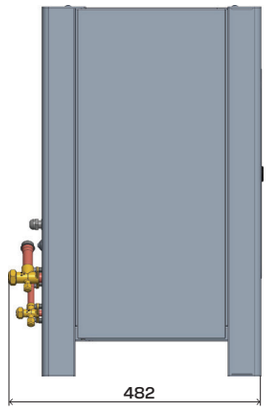

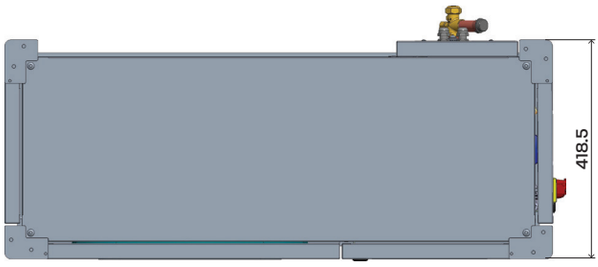

Model Housing 3

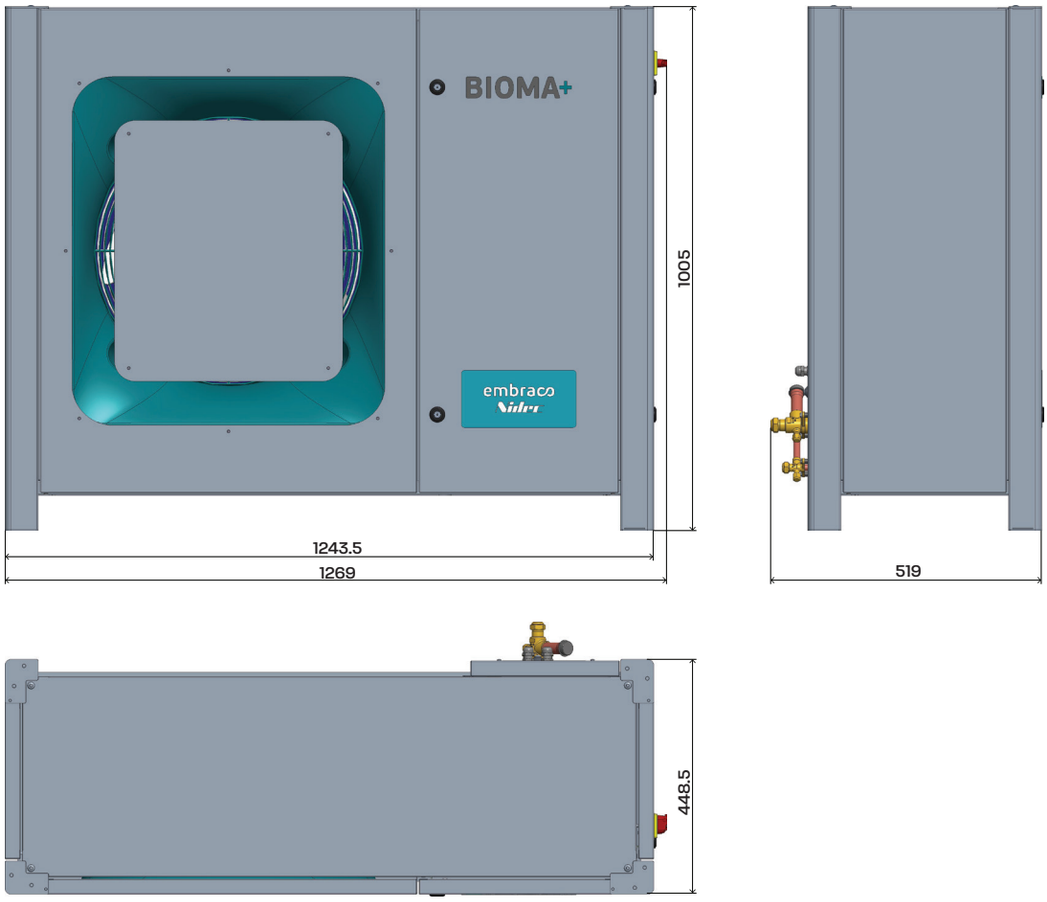

Stackability Options and Accessories

Stack up to two units, even different sizes, with a connection kit. Combine LBP and MBP systems, boost capacity, or add redundancy.

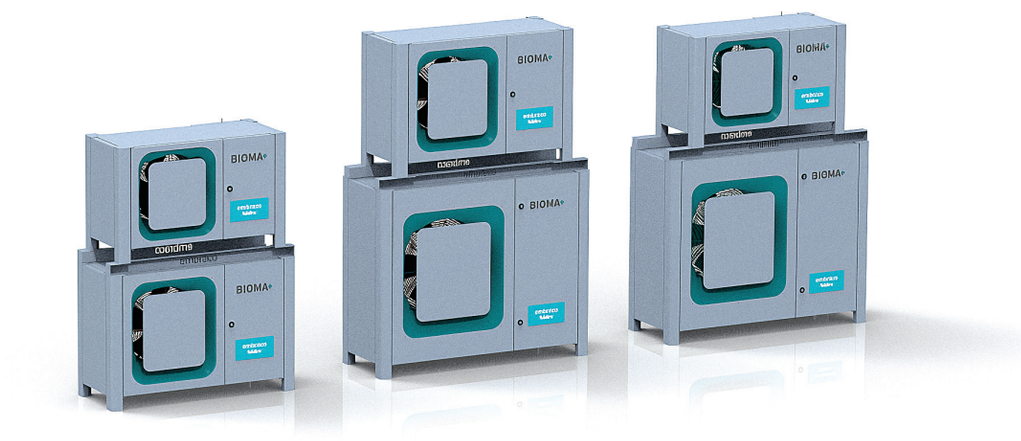

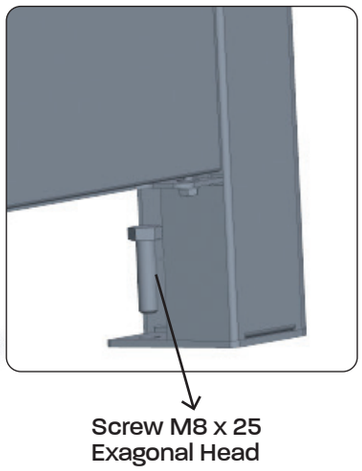

Screw M8 x 25
Exagonal Head

Same housing configurations do not require any stackability KIT.

Configurations	Accessory code
Housing 1 on Housing 2	1996761
Housing 1 on Housing 3	1996762
Housing 2 on Housing 3	

Pressure relief valve

The unit is predisposed to be equipped with a pressure relief valve according to EN 378-2 standard. The valve is not provided by Embraco but has to be procured through third party, according to the following prescriptions:

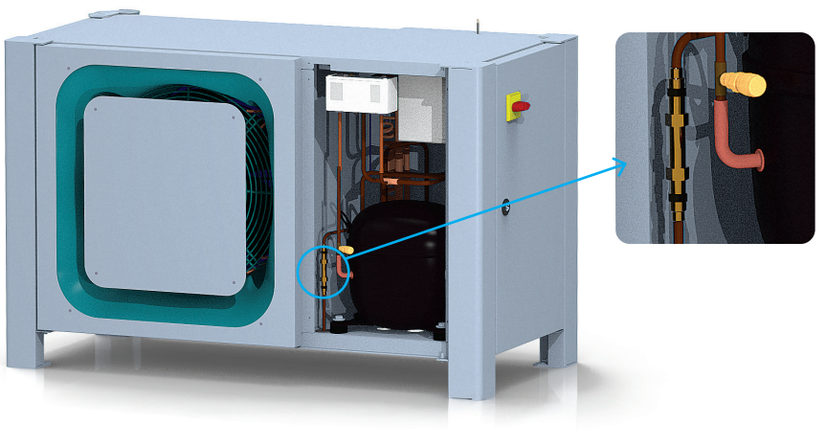

Temperature range	-40 to 149°C
Pressure relief Setpoint	34.5 Bar
Inlet Connection	3/8 NPT male
Outlet Connection	3/8 SAE
Discharge Capacity	510 kg/hour

Packaging Data

MBP

Condensing Unit	Dimensions (mm)					20ft container qty		40ft container qty	
CDU Model	W (width) [mm]	D (Depth) [mm]	H (height) [mm]	External view	Gross Weight [kg]	Not stacked	Stacked	Not stacked	Stacked
HB2NEU6212GL1AMA1	1180	620	920	Housing 1	78	13	26	27	54
HB2NEU6215GL1AMA1	1180	620	920	Housing 1	78	13	26	27	54
HB2NT6222GL-1AMA1	1180	620	920	Housing 1	80	13	26	27	54
HB2NT6224GL-1AMA1	1180	620	920	Housing 1	80	13	26	27	54
HB2NT6226GL-1AMA1	1180	620	920	Housing 1	80	13	26	27	54
HB2NJ9232GL-1AMA1	1180	620	920	Housing 1	87	13	26	27	54
HB2NJ9232GM-1YMA1	1180	620	920	Housing 1	87	13	26	27	54
HB2NTU6238GL1AMA1	1180	620	920	Housing 1	87	13	26	27	54
HB2NJ9238GM-1YMA1	1180	620	920	Housing 1	87	13	26	27	54
HB2NJX6250GM1YMA1	1180	620	920	Housing 2	99	13	26	27	54
HB2ERF15-CB-1AMA1	1180	620	920	Housing 2	103	13	26	27	54
HB2ERF15-CA-1YMA1	1180	620	920	Housing 2	103	13	26	27	54
HB2ERF19-CB-1AMA1	1180	620	920	Housing 2	103	13	26	27	54
HB2ERF19-CA-1YMA1	1180	620	920	Housing 2	103	13	26	27	54
HB2ERF21-CB-1AMA1	1180	620	920	Housing 2	103	13	26	27	54
HB2ERF21-CA-1YMA1	1180	620	920	Housing 2	103	13	26	27	54
HB2ERF26-CA-1YMA1	1380	630	1165	Housing 3	118	13	21	26	44
HB2ERF30-CA-1YMA1	1380	630	1165	Housing 3	118	13	21	26	44
HB2ERF37-CA-1YMA1	1380	630	1165	Housing 3	118	13	21	26	44

LBP

Condensing Unit	Dimensions (mm)					20ft container qty		40ft container qty	
CDU Model	W (width) [mm]	D (Depth) [mm]	H (height) [mm]	External view	Gross Weight [kg]	Not stacked	Stacked	Not stacked	Stacked
HB2NT2212GL-1ALA1	1180	620	920	Housing 1	80	13	26	27	54
HB2NJX2219GM1YLA1	1180	620	920	Housing 2	99	13	26	27	54
HB2ELF07-CB-1ALA1	1180	620	920	Housing 2	103	13	26	27	54
HB2ELF07-CA-1YLA1	1180	620	920	Housing 2	103	13	26	27	54
HB2ELF05-CB-1ALA1	1180	620	920	Housing 2	103	13	26	27	54
HB2ELF19-CA-1YLA1	1180	620	920	Housing 2	103	13	26	27	54
HB2ELF09-CB-1ALA1	1180	620	920	Housing 2	103	13	26	27	54
HB2ELF09-CA-1YLA1	1180	620	920	Housing 2	103	13	26	27	54
HB2ELF12-CA-1YLA1	1380	630	1165	Housing 3	124	13	21	26	44
HB2ELF13-CA-1YLA1	1380	630	1165	Housing 3	124	13	21	26	44
HB2ELF17-CA-1YLA1	1380	630	1165	Housing 3	124	13	21	26	44
HB2ELF20-CA-1YLA1	1380	630	1165	Housing 3	124	13	21	26	44

Wiring Diagrams

Hermetic reciprocating compressors 230V-1ph-50Hz

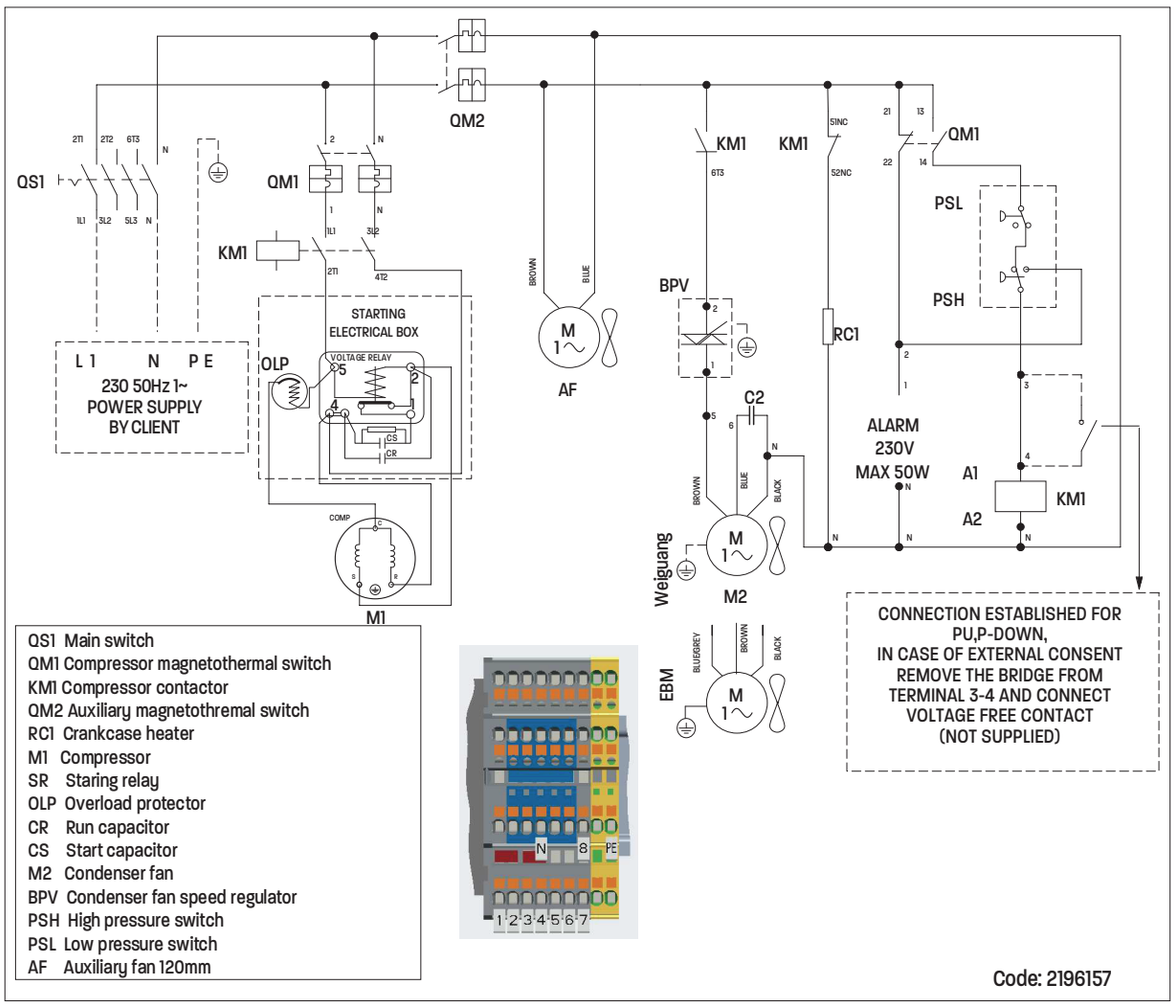

QS1 Main switch
QM1 Compressor magnetothermal switch
KM1 Compressor contactor
QM2 Auxiliary magnetothremal switch
RC1 Crankcase heater
M1 Compressor
SR Staring relay
OLP Overload protector
CR Run capacitor
CS Start capacitor
M2 Condenser fan
BPV Condenser fan speed regulator
PSH High pressure switch
PSL Low pressure switch
AF Auxiliary fan 120mm

Code: 2196157

Hermetic reciprocating compressors and scroll MBP 400V-3ph-50Hz

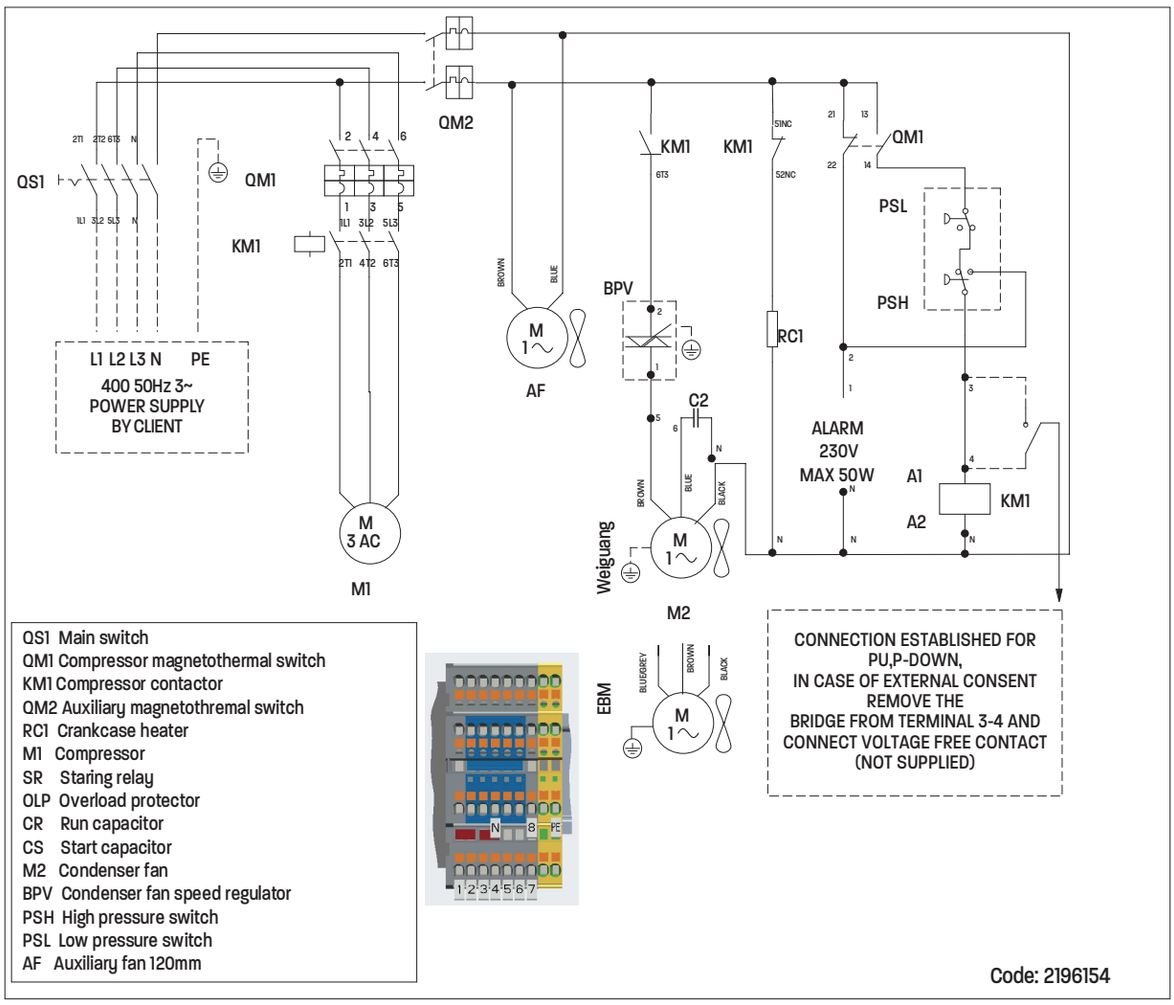

Hermetic scroll compressors LBP 400V-3ph-50Hz

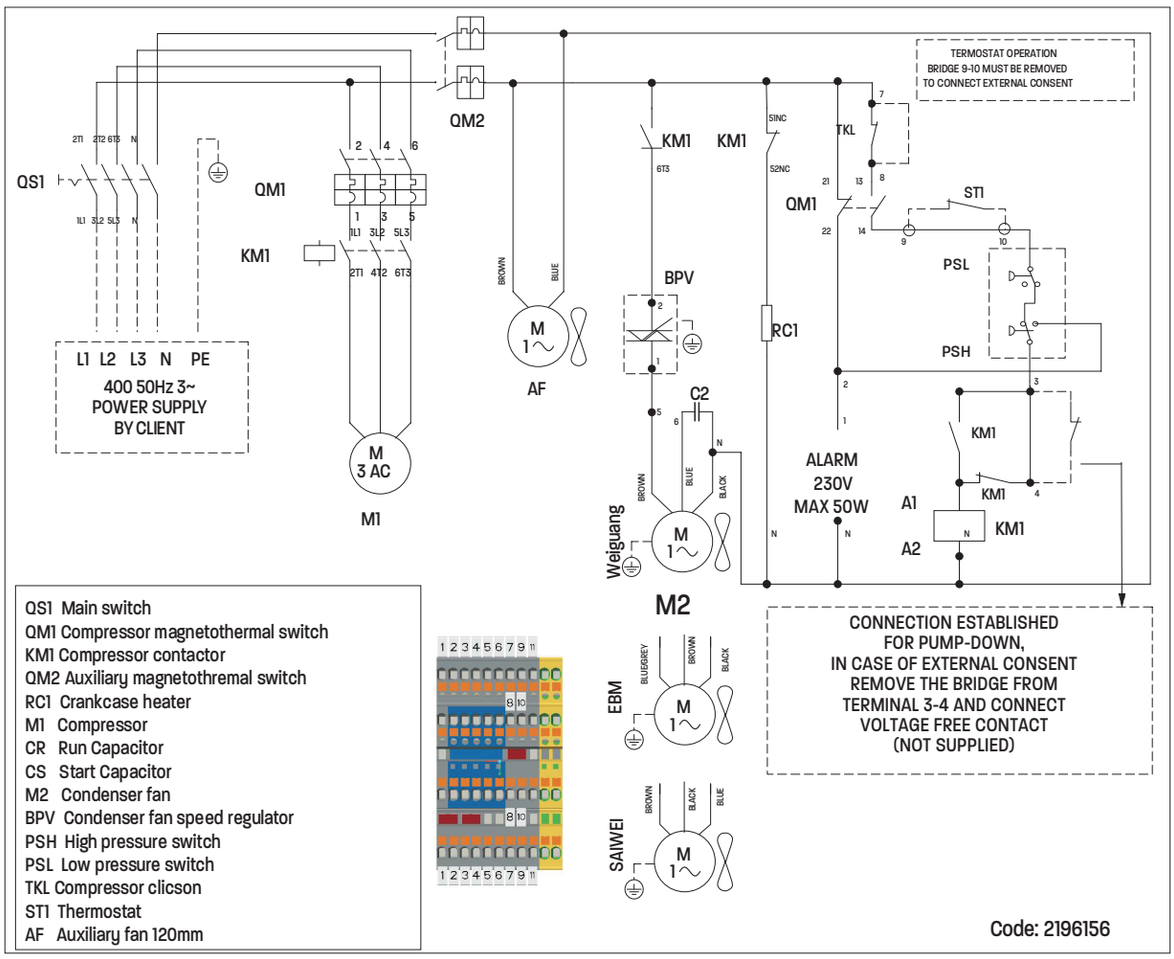

Hermetic scroll compressors 230V-1ph-50Hz

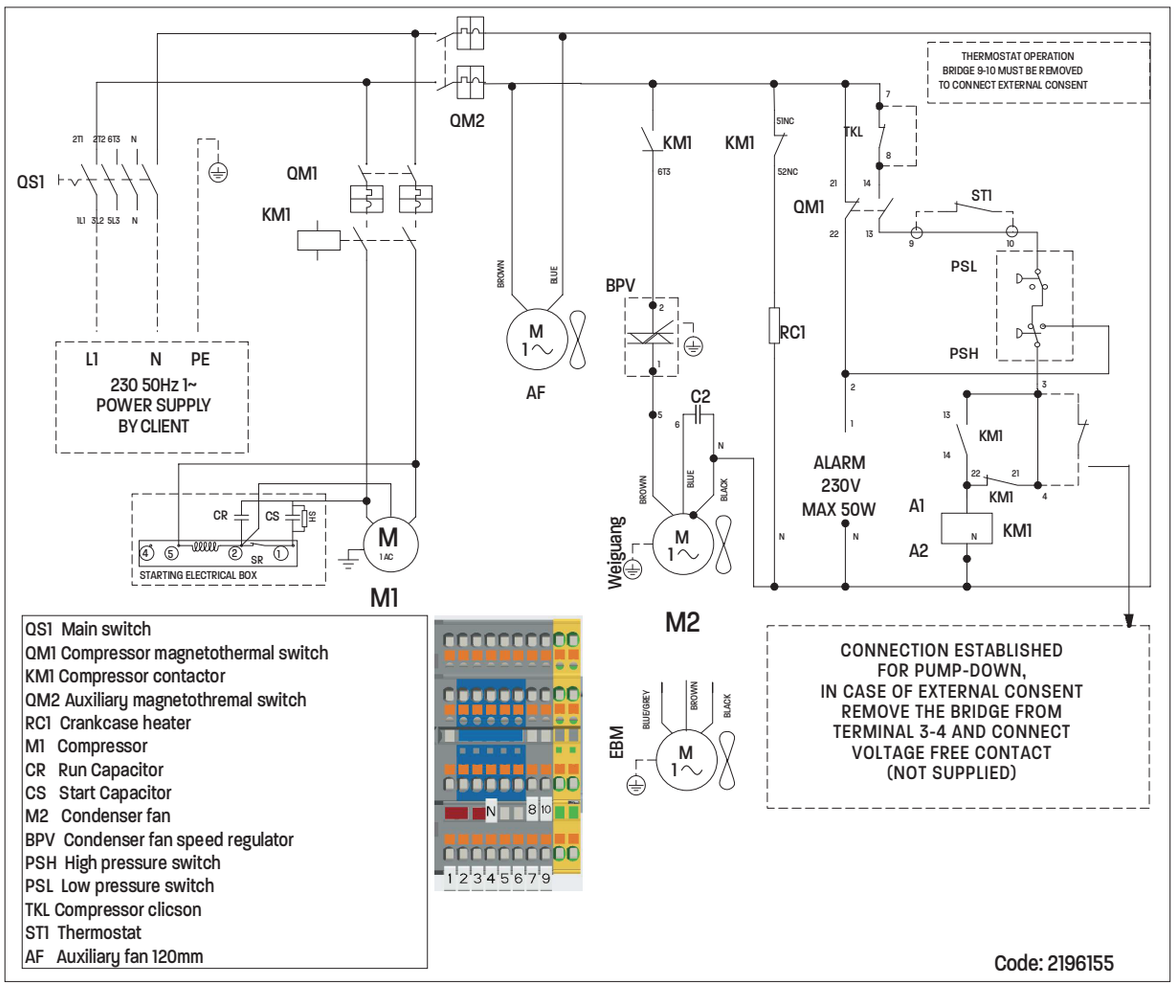

Discover
more about
Bioma+



embraco
Nidec

embraco.com

Subject to alteration without previous notice
2026